PSOC™ 63 MCU with Bluetooth® LE

General description

PSOC™ 6 MCU is a high-performance, ultra-low-power and secured MCU platform, purpose-built for IoT applications. The PSOC™ 63 with Bluetooth® LE product line, based on the PSOC™ 6 MCU platform, is a combination of a high-performance microcontroller with low-power flash technology, digital programmable logic, high-performance analog-to-digital conversion and standard communication and timing peripherals.

The PSOC™ 63 product line provides wireless connectivity with Bluetooth® LE 5.0 compliance.

Features

- 32-bit Dual CPU subsystem
  - 150-MHz Arm® Cortex®-M4F (CM4) CPU with single-cycle multiply, floating point, and memory protection unit (MPU)
  - 100-MHz Cortex®-M0+ (CM0+) CPU with single-cycle multiply and MPU
  - User-selectable core logic operation at either 1.1 V or 0.9 V
  - Active CPU current slope with 1.1-V core operation
  - Cortex®-M4: 40 µA/MHz
  - Cortex®-M0+: 20 µA/MHz
  - Active CPU current slope with 0.9-V core operation
  - Cortex®-M4: 22 µA/MHz
  - Cortex®-M0+: 15 µA/MHz
  - Two DMA controllers with 16 channels each
- Memory subsystem
  - 1-MB application flash, 32-KB auxiliary flash (AUXflash), and 32-KB supervisory flash (SFlash); read-while-write (RWW) support. Two 8-KB flash caches, one for each CPU.
  - 288-KB SRAM with power and data retention control
  - One-time-programmable (OTP) 1-Kb eFuse array
- Bluetooth® Low Energy subsystem
  - 2.4-GHz RF transceiver with 50-Ω antenna drive
  - Digital PHY
  - Link Layer engine supporting master and slave modes
  - Programmable TX power: up to 4 dBm
  - RX sensitivity: –95 dBm
  - RSSI: 4-dB resolution
  - 5.7-mA Tx (0 dBm) and 6.7 mA RX (2 Mbps) current with 3.3-V supply and internal SIMO Buck converter
  - Link Layer engine supports four connections simultaneously
  - Supports 2 Mbps data rate
- Low-power 1.7-V to 3.6-V operation
  - Six power modes for fine-grained power management
  - Deep Sleep mode current of 7 µA with 64-KB SRAM retention
  - On-chip Single-In Multiple Out (SIMO) DC-DC buck converter, <1 µA quiescent current
  - Backup domain with 64 bytes of memory and real-time clock
- Flexible clocking options
  - 8-MHz Internal Main Oscillator (IMO) with ±2% accuracy
  - Ultra-low-power 32-kHz Internal Low-speed Oscillator (ILO)
  - On-chip crystal oscillators (16 to 35 MHz, and 32 kHz)
  - Phase-locked loop (PLL) for multiplying clock frequencies

  - Frequency-locked loop (FLL) for multiplying IMO frequency
  - Integer and fractional peripheral clock dividers
- Quad SPI (QSPI)/Serial Memory Interface (SMIF)
  - Execute-In-Place (XIP) from external quad SPI Flash
  - On-the-fly encryption and decryption
  - 4-KB cache for greater XIP performance with lower power
  - Supports single, dual, quad, dual-quad, and octal interfaces with throughput up to 640 Mbps
- Segment LCD Drive
  - Supports up to 83 segments and up to 8 commons
- Serial communication
  - Nine run-time configurable serial communication blocks (SCBs)
    - Eight SCBs: configurable as SPI, I^2C, or UART
    - One Deep Sleep SCB: configurable as SPI or I^2C
  - USB full-speed device/host interface
- Audio subsystem
  - Two pulse density modulation (PDM) channels and one I2S channel with time division multiplexed (TDM) mode
- Timing and pulse-width modulation
  - Thirty-two timer/counter/pulse-width modulators (TCPWM)
  - Center-aligned, edge, and pseudo-random modes
  - Comparator-based triggering of Kill signals
- Programmable analog
  - 12-bit 1-Msps SAR ADC with differential and single-ended modes and 16-channel sequencer with result averaging
  - Two low-power comparators available in Deep Sleep and Hibernate modes
  - Built-in temperature sensor connected to ADC
  - One 12-bit voltage-mode digital-to-analog converter (DAC) with < 2-µs settling time
  - Two opamps with low-power operation modes
- Up to 84 programmable GPIOs
  - Two Smart I/O ports (16 I/Os) enable Boolean operations on GPIO pins; available during system Deep Sleep
  - Programmable drive modes, strengths, and slew rates
  - Six overvoltage-tolerant (OVT) pins
- Capacitive sensing
  - CAPSENSE™ provides best-in-class signal-to-noise ratio (SNR), liquid tolerance, and proximity sensing
  - Enables dynamic usage of both self and mutual sensing
  - Automatic hardware tuning (SmartSense)
- Security Built into Platform Architecture
  - ROM-based root of trust via uninterruptible “Secure Boot”
  - Step-wise authentication of execution images
  - Secured execution of code in execute-only mode for protected routines
  - All Debug and Test ingress paths can be disabled
  - Up to eight Protection Contexts
- Cryptography accelerator
  - Hardware acceleration for symmetric and asymmetric cryptographic methods and hash functions
  - True random number generation (TRNG) function

- Programmable digital
  - Twelve programmable logic blocks, each with 8 Macrocells and an 8-bit data path (called universal digital blocks or UDBs)
  - Usable as drag-and-drop Boolean primitives (gates, registers), or as Verilog-programmable blocks
  - Infineon-provided peripheral component library using UDBs to implement functions such as communication peripherals (for example, LIN, UART, SPI, I^2C, S/PDIF and other protocols), Waveform Generators, Pseudo-Random Sequence (PRS) generation, and many other functions.
- Profiler
  - Eight counters provide event or duration monitoring of on-chip resources
- Packages
  - 124-BGA and 104-M-CSP; with USB
  - 116-BGA, 104-M-CSP, and 68-QFN; no USB
- Device identification and revisions
  - Product line ID (12-bit): 0x100
  - Major/Minor Die Revision ID: 2/4
  - Firmware Revisions: Rom Boot: 4.1
  - **Table 1 Flash boot versions**

Flash boot revision	Description of change
1.20.1.45	Baseline production release
1.20.1.53	Implements manual clock transition from FLL output to IMO to resolve Table 67 errata.

See Boot Code section for more details on boot code

This product line has a JTAG ID which is available through the SWJ interface. It is a 32-bit ID, where:

- The Silicon ID system call can be used by firmware to get Silicon ID and ROM Boot data. For more information, see the technical reference manual (TRM).
- The Flash Boot version can be read directly from a designated address 0x1600 2004. For more information, see the technical reference manual (TRM).

Table of contents

General description . . . 1

Features . . . 1

Table of contents . . . 4

1 Development ecosystem . . . 7
1.1 PSOC™ 6 MCU resources . . . 7
1.2 ModusToolbox™ software . . . 7
1.3 PSOC™ Creator . . . 8

2 Blocks and functionality . . . 10

3 Functional description . . . 12
3.1 CPU and memory subsystem . . . 12
3.1.1 CPUs . . . 12
3.1.2 Interrupts . . . 13
3.1.3 InterProcessor Communication (IPC) . . . 13
3.1.4 DMA controllers . . . 14
3.1.5 Cryptography accelerator (Crypto) . . . 14
3.1.6 Protection units . . . 14
3.1.7 Memory . . . 15
3.1.8 Boot Code . . . 15
3.1.9 Memory map . . . 16
3.2 System resources . . . 17
3.2.1 Power system . . . 17
3.2.2 Power modes . . . 17
3.2.3 Clock system . . . 18
3.2.4 Internal Main Oscillator (IMO) . . . 18
3.2.5 Internal Low-speed Oscillator (ILO) . . . 18
3.2.6 External Crystal Oscillators . . . 19
3.2.7 Watchdog timers (WDT, MCWDT) . . . 20
3.2.8 Clock dividers . . . 20
3.2.9 Trigger routing . . . 20
3.2.10 Reset . . . 20
3.3 Bluetooth® LE Radio and Subsystem . . . 21
3.4 Programmable analog subsystem . . . 22
3.4.1 12-bit SAR ADC . . . 22
3.4.2 Temperature sensor . . . 23
3.4.3 12-bit digital-analog converter . . . 23
3.4.4 Continuous Time Block mini (CTBm) with two opamps . . . 23
3.4.5 Low-power comparators . . . 23
3.5 Programmable digital . . . 25

3.5.1 Smart I/O . . . 25
3.5.2 Universal digital blocks (UDBs) . . . 25
3.6 Fixed-function digital . . . 26
3.6.1 Timer/counter/pulse-width modulator (TCPWM) block . . . 26
3.6.2 Serial communication blocks (SCB) . . . 27
3.6.3 USB Full-Speed device/host Interface . . . 27
3.6.4 QSPI Interface Serial Memory Interface (SMIF) . . . 27
3.6.5 LCD . . . 28
3.7 GPIO . . . 28
3.8 Special-function peripherals . . . 29
3.8.1 Audio subsystem . . . 29
3.8.2 CAPSENSE™ Subsystem . . . 29

4 Pinouts . . . 34

5 Power supply considerations . . . 56

6 Electrical specifications . . . 63
6.1 Absolute maximum ratings . . . 63
6.2 Device-level specifications . . . 64
6.2.1 Power supplies . . . 65
6.2.2 CPU current and transition times . . . 66
6.2.3 XRES . . . 77
6.2.4 GPIO . . . 78
6.3 Analog peripherals . . . 81
6.3.1 Opamp . . . 81
6.3.2 Low-Power (LP) Comparator . . . 87
6.3.3 SAR ADC . . . 90
6.3.4 DAC . . . 93
6.3.5 CSD . . . 94
6.4 Digital peripherals . . . 104
6.4.1 LCD specifications . . . 109
6.5 Memory . . . 110
6.5.1 Flash . . . 110
6.6 System resources . . . 111
6.6.1 Power-on-reset . . . 111
6.6.2 Voltage monitors . . . 112
6.6.3 SWD and Trace interface . . . 113
6.6.4 Internal Main Oscillator . . . 114
6.6.5 Internal Low-Speed Oscillator . . . 114
6.6.6 Crystal oscillator . . . 115
6.6.7 External clock . . . 115
6.6.8 PLL . . . 116
6.6.9 Clock source switching time . . . 116

6.6.10 FLL . . . 117
6.6.11 UDB . . . 117
6.6.12 USB . . . 119
6.6.13 QSPI . . . 120
6.6.14 Audio subsystem . . . 121
6.6.15 Smart I/O . . . 126
6.6.16 Precision ILO (PILO) . . . 126
6.6.17 JTAG Boundary Scan . . . 127
6.7 Bluetooth® LE . . . 128
7 Ordering information . . . 140
7.1 PSOC™ 6 MPN decoder . . . 142
8 Packaging . . . 144
9 Acronyms . . . 150
10 Document conventions . . . 154
10.1 Unit of measure . . . 154
11 Errata . . . 156
Revision history . . . 157
Trademarks . . . 160
Disclaimer . . . 161

1 Development ecosystem

1.1 PSOC™ 6 MCU resources

Infineon provides a wealth of data at www.infineon.com to help you select the right PSOC™ device and quickly and effectively integrate it into your design. The following is an abbreviated, hyperlinked list of resources for PSOC™ 6 MCU:

- Overview: PSOC™ portfolio
- Product selectors: PSOC™ 6 MCU
- Application notes cover a broad range of topics, from basic to advanced level, and include the following:
  - AN221774: Getting Started with PSOC™ 6 MCU on PSOC™ Creator
  - AN210781: Getting Started with PSOC™ 6 MCU with Bluetooth® Low Energy Connectivity on PSOC™ Creator
  - AN218241: PSOC™ 6 MCU hardware design considerations
  - AN213924: PSOC™ 6 MCU Device Firmware Update (DFU) software development kit guide
  - AN215656: PSOC™ 6 MCU dual-core system design
  - AN219528: PSOC™ 6 MCU low-power modes and power reduction techniques
  - AN221111: PSOC™ 6 MCU designing a custom secured system
  - AN85951: PSOC™ 4 and PSOC™ 6 MCU CAPSENSE™ design guide
- Code examples demonstrate product features and usage, and are also available on Infineon GitHub repositories.
- Technical reference manuals (TRMs) provide detailed descriptions of PSOC™ 6 MCU architecture and registers.
- PSOC™ 6 MCU programming specification provides the information necessary to program PSOC™ 6 MCU nonvolatile memory.
- Development tools
  - ModusToolbox™ software enables cross platform code development with a robust suite of tools and software libraries.
  - CY8CKIT-062-BLE - PSOC™ 6-Bluetooth® LE Pioneer Kit: a hardware platform that enables design and debug of the PSOC™ 63-BLE product line.
  - CY8CPROTO-063-BLE - PSOC™ 6-Bluetooth® LE Prototyping Kit: a low-cost PSOC™ 63-Bluetooth® LE kit with a snap-away form factor.
  - PSOC™ 6 CAD libraries provide footprint and schematic support for common tools. BSDL files and IBIS models are also available.
- Training videos are available on a wide range of topics including the PSOC™ 6 MCU 101 series.
- Infineon developer community enables connection with fellow PSOC™ developers around the world, 24 hours a day, 7 days a week, and hosts a dedicated PSOC™ 6 MCU Community.

1.2 ModusToolbox™ software

ModusToolbox™ software is Infineon's comprehensive collection of multi-platform tools and software libraries that enable an immersive development experience for creating converged MCU and wireless systems. It is:

- Comprehensive - it has the resources you need
- Flexible - you can use the resources in your own workflow
- Atomic - you can get just the resources you want

Infineon provides a large collection of code repositories on GitHub. This includes:

- Board Support Packages (BSPs) aligned with Infineon kits
- Low-level resources, including a hardware abstraction layer (HAL) and peripheral driver library (PDL)
- Middleware enabling industry-leading features such as CAPSENSE™, Bluetooth® Low Energy, and mesh networks
- An extensive set of thoroughly tested code example applications

***Note**:* *The HAL provides a high-level, simplified interface to configure and use the hardware blocks on Infineon MCUs. It is a generic interface that can be used across multiple product families. For example, it wraps the PSOC™ 6 PDL with a simplified API, but the PDL exposes all low-level peripheral functionality. You can leverage the HAL's simpler and more generic interface for most of an application, even if one portion requires finer-grained control.*

ModusToolbox™ software is IDE-neutral and easily adaptable to your workflow and preferred development environment. It includes a project creator, peripheral and library configurators, a library manager, as well as the optional Eclipse IDE for ModusToolbox™, as Figure 1 shows. For information on using Infineon tools, refer to the documentation delivered with ModusToolbox™ software, and AN228571: Getting started with PSOC™ 6 MCU on ModusToolbox™.

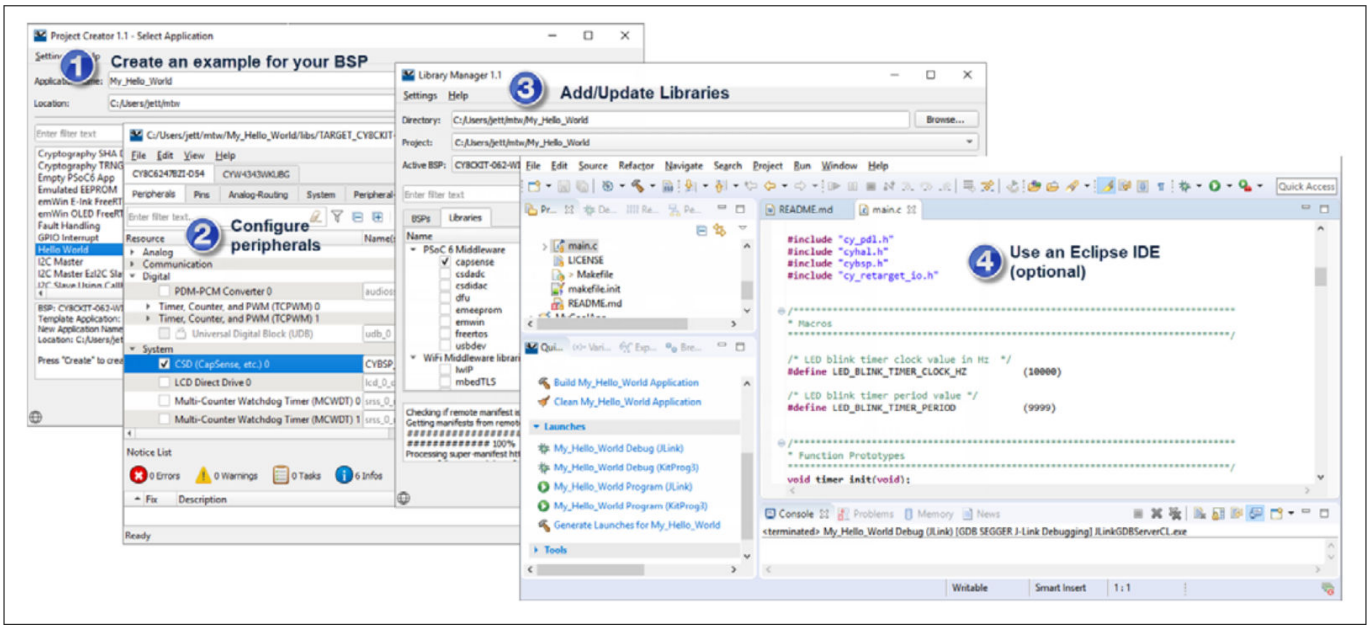

Figure 1 **ModusToolbox™ software tools**

1.3 PSOC™ Creator

***Note**:* *PSOC™ Creator is not recommended for new designs.*

PSOC™ Creator is a free Windows-based Integrated Design Environment (IDE). It enables you to design hardware and firmware systems concurrently, based on the PSOC™ 6 MCU. Figure 2 shows that with PSOC™ Creator, you can:

1. Explore the library of 200+ Components in PSOC™ Creator
2. Drag and drop Component icons to complete your hardware system design in the main design workspace
3. Configure Components using the Component Configuration Tools and the Component datasheets

4. Co-design your application firmware and hardware in the PSOC™ Creator IDE or build project for third-party IDE
5. Prototype your solution with the PSOC™ 6 Pioneer Kits. If a design change is needed, PSOC™ Creator and Components enable you to make changes on-the-fly without the need for hardware revisions.

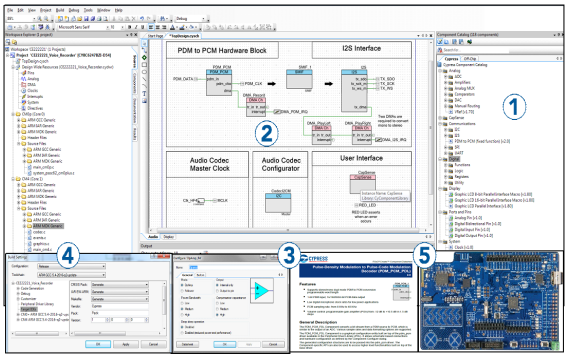

Figure 2 **PSOC™ Creator schematic entry and components**

2 Blocks and functionality

Figure 3 shows the major subsystems and a simplified view of their interconnections. The color coding shows the lowest power mode where a block is still functional. For example, the SRAM is functional down to Deep Sleep mode.

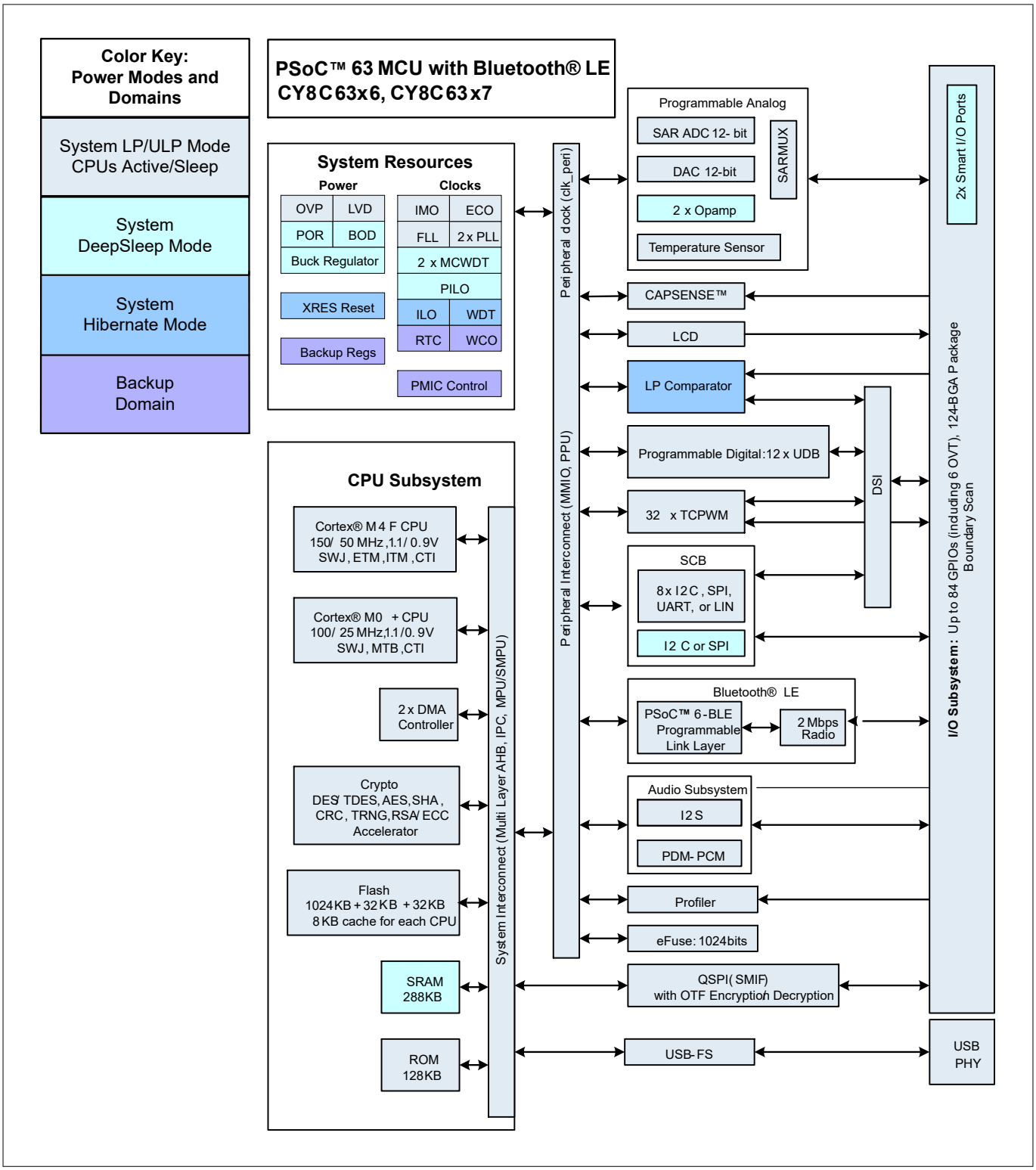

Figure 3 Block diagram

There are three debug access ports, one each for CM4 and CM0+, and a system port. PSOC™ 6 MCU devices include extensive support for programming, testing, debugging, and tracing both hardware and firmware. All

device interfaces can be permanently disabled for applications concerned about a reprogrammed device or starting and interrupting flash programming sequences. All programming, debug, and test interfaces can be disabled.

Complete debug-on-chip functionality enables full device debugging in the final system using the standard production device. It does not require special interfaces, debugging pods, simulators, or emulators. Only the standard programming connections are required to fully support debug.

The Eclipse IDE for ModusToolbox™ software and PSOC™ Creator[1] Integrated Development Environment (IDE) provide fully integrated programming and debug support for these devices. The SWJ (SWD and JTAG) interface is fully compatible with industry-standard third party probes. With the ability to disable debug features, with very robust flash protection, and by allowing customer-proprietary functionality to be implemented in on-chip programmable blocks, PSOC™ 6 provides multiple levels of device security.

[1] PSOC™ Creator is not recommended for new designs.

3 Functional description

The following sections provide an overview of the features, capabilities and operation of each functional block identified in the block diagram in Figure 3. For more detailed information, refer to the following documentation:

- Board support package (BSP) documentation

  BSPs are available on GitHub. They are aligned with Infineon kits and provide files for basic device functionality such as hardware configuration files, startup code, and linker files. The BSP also includes other libraries that are required to support a kit. Each BSP has its own documentation, but typically includes an API reference such as the example here. This search link finds all currently available BSPs on the Infineon GitHub site
- Hardware abstraction layer API reference manual

  The Infineon Hardware Abstraction Layer (HAL) provides a high-level interface to configure and use hardware blocks on Infineon MCUs. It is a generic interface that can be used across multiple product families. You can leverage the HAL's simpler and more generic interface for most of an application, even if one portion requires finer-grained control. The HAL API Reference provides complete details. Example applications that use the HAL download it automatically from the GitHub repository
- Peripheral Driver Library (PDL) Application Programming Interface (API) Reference Manual

  The Peripheral Driver Library (PDL) integrates device header files and peripheral drivers into a single package and supports all PSOC™ 6 MCU product lines. The drivers abstract the hardware functions into a set of easy-to-use APIs. These are fully documented in the PDL API Reference. Example applications that use the PSOC™ 6 PDL download it automatically from the GitHub repository
- Architecture reference manual

  The architecture reference manual provides a detailed description of each resource in the device. This is the next reference to use if it is necessary to understand the operation of the hardware below the software provided by PDL. It describes the architecture and functionality of each resource and explains the operation of each resource in all modes. It provides specific guidance regarding the use of associated registers
- Register reference manual

  The register reference manual provides a complete list of all registers in the device. It includes the breakdown of all register fields, their possible settings, read/write accessibility, and default states. All registers that have a reasonable use in typical applications have functions to access them from within PDL. Note that ModusToolbox™ and PDL may provide software default conditions for some registers that are different from and override the hardware defaults

3.1 CPU and memory subsystem

PSOC™ 6 has multiple bus masters, as Figure 3 shows. They are: CPUs, DMA controllers, QSPI, USB, and a Crypto block. Generally, all memory and peripherals can be accessed and shared by all bus masters through multi-layer Arm® AMBA high-performance bus (AHB) arbitration. Accesses between CPUs can be synchronized using an inter-processor communication (IPC) block.

3.1.1 CPUs

There are two Arm® Cortex® CPUs:

The Cortex®-M4 (CM4) has single-cycle multiply, a floating-point unit (FPU), and a memory protection unit (MPU). It can run at up to 150 MHz. This is the main CPU, designed for a short interrupt response time, high code density, and high throughput.

CM4 implements a version of the Thumb instruction set based on Thumb-2 technology (defined in the Armv7-M Architecture Reference Manual).

The Cortex®-M0+ (CM0+) has single-cycle multiply, and an MPU. It can run at up to 100 MHz; however, for CM4 speeds above 100 MHz, CM0+ and bus peripherals are limited to half the speed of CM4. Thus, for CM4 running at 150 MHz, CM0+ and peripherals are limited to 75 MHz in system low power (LP) mode. In system ultra-low power (ULP) mode, CPU speeds are limited to 50 MHz and 25 MHz respectively.

CM0+ is the secondary CPU; it is used to implement system calls and device-level safety and protection features. CM0+ provides a secured, uninterruptible boot function. This helps ensure that post boot, system integrity is checked and memory and peripheral access privileges are enforced.

CM0+ implements the Armv6-M Thumb instruction set (defined in the Armv6-M Architecture Reference Manual).

The CPUs have the following power draw, at V_{DDD} = 3.3 V and using the internal buck regulator:

Table 2 Active current slope at V_{DDD} = 3.3 V using the internal buck regulator

		System power mode	
		ULP	LP
CPU	Cortex®-M0+	15 µA/MHz	20 µA/MHz
	Cortex®-M4	22 µA/MHz	40 µA/MHz

The CPUs can be selectively placed in their Sleep and Deep Sleep power modes as defined by Arm®.

Both CPUs have nested vectored interrupt controllers (NVIC) for rapid and deterministic interrupt response, and wakeup interrupt controllers (WIC) for CPU wakeup from Deep Sleep power mode.

The CPUs have extensive debug support. PSOC™ 6 has a debug access port (DAP) that acts as the interface for device programming and debug. An external programmer or debugger (the “host”) communicates with the DAP through the device serial wire debug (SWD) or Joint Test Action Group (JTAG) interface pins. Through the DAP (and subject to restrictions), the host can access the device memory and peripherals as well as the registers in both CPUs.

Each CPU offers debug and trace features as follows:

- CM4 supports six hardware breakpoints and four watchpoints, 4-bit embedded trace macrocell (ETM), serial wire viewer (SWV), and printf()-style debugging through the single wire output (SWO) pin.
- CM0+ supports four hardware breakpoints and two watchpoints, and a micro trace buffer (MTB) with 4-KB dedicated RAM.

PSOC™ 6 also has an Embedded Cross Trigger for synchronized debugging and tracing of both CPUs.

3.1.2 Interrupts

This product line has 147 system and peripheral interrupt sources and supports interrupts and system exceptions on both CPUs. CM4 has 147 interrupt request lines (IRQ), with the interrupt source ‘n’ directly connected to IRQn. CM0+ has 32 interrupts IRQ[31:0] with configurable mapping of one system interrupt source to any of the IRQ[31:0].

Each interrupt supports configurable priority levels (eight levels for CM4 and four levels for CM0+). One system interrupt can be mapped to each of the CPUs' non-maskable interrupts (NMI). Up to 41 interrupt sources are capable of waking the device from Deep Sleep power mode using the WIC. Refer to the technical reference manual for details.

3.1.3 InterProcessor Communication (IPC)

In addition to the Arm® SEV and WFE instructions, a hardware InterProcessor Communication (IPC) block is included. It includes 16 IPC channels and 16 IPC interrupt structures. The IPC channels can be used to implement data communication between the processors. Each IPC channel also implements a locking scheme which can be used to manage shared resources. The IPC interrupts let one processor interrupt the other,

signaling an event. This is used to trigger events such as notify and release of the corresponding IPC channels. Some IPC channels and other resources are reserved, as Table 3 shows:

Table 3 Distribution of IPC channels and other resources

Resources available	Resources consumed
IPC channels, 16 available	8 reserved
IPC interrupts, 16 available	8 reserved
Other interrupts	1 reserved
CM0+ NMI	Reserved
Other resources: clock dividers, DMA channels, etc.	1 CM0+ interrupt mux

3.1.4 DMA controllers

There are two DMA controllers with 16 channels each, which support CPU-independent accesses to memory and peripherals. The descriptors for DMA channels can be in SRAM or flash. Therefore, the number of descriptors are limited only by the size of the memory. Each descriptor can transfer data in two nested loops with configurable address increments to the source and destination. The size of data transfer per descriptor varies based on the type of DMA channel. Refer to the technical reference manual for detail.

3.1.5 Cryptography accelerator (Crypto)

This subsystem consists of hardware implementation and acceleration of cryptographic functions and random number generators.

The Crypto subsystem supports the following:

- Encryption/Decryption Functions
  - Data Encryption Standard (DES)
  - Triple DES (3DES)
  - Advanced Encryption Standard (AES) (128-, 192-, 256-bit)
  - Elliptic Curve Cryptography (ECC)
  - RSA cryptography functions
- Hashing functions
  - Secure Hash Algorithm (SHA)
  - SHA-1
  - SHA-224/-256/-384/-512
- Message authentication functions (MAC)
  - Hashed message authentication code (HMAC)
  - Cipher-based message authentication code (CMAC)
- 32-bit cyclic redundancy; code (CRC) generator
- Random number generators
  - Pseudo random number generator (PRNG)
  - True random number generator (TRNG)

3.1.6 Protection units

This product line has multiple types of protection units to control erroneous or unauthorized access to memory and peripheral registers. CM4 and CM0+ have Arm® MPUs for protection at the bus master level. Other bus

masters use additional MPUs. Shared memory protection units (SMPUs) help implement memory protection for memory resources that are shared among multiple bus masters. Peripheral protection units (PPU) are similar to SMPUs but are designed for protecting the peripheral register space.

Protection units support memory and peripheral access attributes including address range, read/write, code/data, privilege level, secured/non-secured, and protection context. Some protection unit resources are reserved for system usage; see the technical reference manual (TRM) for details.

3.1.7 Memory

PSOC™ 6 contains flash, SRAM, ROM, and eFuse memory blocks.

- Flash

  There is up to 1 MB of application flash, organized in 256-KB sectors. There are also two 32-KB flash sectors:

  - Auxiliary flash (AUXflash), typically used for EEPROM emulation
  - Supervisory flash (SFlash). Data stored in SFlash includes device trim values, Flash Boot code, and encryption keys. After the device transitions into the “Secure” lifecycle stage, SFlash can no longer be changed.

  The flash has 128-bit-wide accesses to reduce power. Write operations can be performed at the row level. A row is 512 bytes. Read operations are supported in both Low Power and Ultra-Low Power modes, however write operations may not be performed in Ultra-Low Power mode. The flash controller has two caches, one for each CPU. Each cache is 8 KB, with 4-way set associativity.

- SRAM

  Up to 288 KB of SRAM is provided. Power control and retention granularity is implemented in 32-KB blocks allowing the user to control the amount of memory retained in Deep Sleep. Memory is not retained in Hibernate mode.

- ROM

  The 128-KB ROM, also referred to as the supervisory ROM (SROM), provides code (ROM Boot) for several system functions. The ROM contains device initialization, flash write, security, eFuse programming, and other system-level routines. ROM code is executed only by the CM0+ CPU, in protection context 0. A system function can be initiated by either CPU, or through the DAP. This causes an NMI in CM0+, which causes CM0+ to execute the system function.

- eFuse

  A one-time-programmable (OTP) eFuse array consists of 1024 bits, of which 512 are reserved for system use such as die ID, device ID, initial trim settings, device life cycle, and security settings. The remaining bits are available for storing key information, hash values, unique IDs or similar custom content.

  Each fuse is individually programmed; once programmed (or “blown”), its state cannot be changed. Blowing a fuse transitions it from the default state of 0 to 1. To program an eFuse, VDDIO0 must be at 2.5 V ±5%, at 14 mA.

  Because blowing an eFuse is an irreversible process, programming is recommended only in mass production under controlled factory conditions. For more information, see PSOC™ 6 MCU Programming Specifications.

3.1.8 Boot Code

Two blocks of code, ROM Boot and Flash Boot, are pre-programmed into the device and work together to provide device startup and configuration, basic security features, life-cycle stage management and other system functions.

- ROM Boot

  On a device reset, the boot code in ROM is the first code to execute. This code performs the following:

  - Integrity checks of flash boot code

- Device trim setting (calibration)
- Setting the device protection units
- Setting device access restrictions for life-cycle states

ROM cannot be changed and acts as the Root of Trust in a secured system.

- Flash Boot

  Flash boot is a firmware module stored in SFlash and application flash. It ensures that only a validated application may run on the device. It also ensures that the firmware image has not been modified, such as by a malicious third party.

  Flash boot:

  - Is validated by ROM Boot
  - Runs after ROM Boot and before the user application
  - Enables system calls
  - Configures the Debug Access Port
  - Launches the user application

  If the user application cannot be validated, then flash boot ensures that the device is transitioned into a safe state.

3.1.9 Memory map

Both CPUs have a fixed address map, with shared access to memory and peripherals. The 32-bit (4 GB) address space is divided into the regions shown in Table 4. Note that code can be executed from the Code and External RAM.

Table 4 Address Map for CM4 and CM0+

Address range	Name	Use
0x0000 0000 – 0x1FFF FFFF	Code	Program code region. Data can also be placed here. It includes the exception vector table, which starts at address 0.
0x2000 0000 – 0x3FFF FFFF	SRAM	Data region. This region is not supported in PSOC™ 6.
0x4000 0000 – 0x5FFF FFFF	Peripheral	All peripheral registers. Code cannot be executed from this region. CM4 bit-band in this region is not supported in PSOC™ 6.
0x6000 0000 – 0x9FFF FFFF	External RAM	SMIF or Quad SPI, (see the QSPI Interface Serial Memory Interface (SMIF) section). Code can be executed from this region.
0xA000 0000 – 0xDFFF FFFF	External Device	Not used.
0xE000 0000 – 0xE00F FFFF	Private Peripheral Bus	Provides access to peripheral registers within the CPU core.
0xE010 0A000 – 0xFFFF FFFF	Device	Device-specific system registers.

The device memory map shown in Table 5 applies to both CPUs. That is, the CPUs share access to all PSOC™ 6 MCU memory and peripheral registers.

Table 5 Internal memory address map for CM4 and CM0+

Address range	Memory type	Size
0x0000 0000 – 0x0001 FFFF	ROM	128 KB
0x0800 0000 – 0x0804 7FFF	SRAM	Up to 288 KB
0x1000 0000 – 0x100F FFFF	Application flash	Up to 1 MB
0x1400 0000 – 0x1400 7FFF	Auxiliary flash, can be used for EEPROM emulation	32KB
0x1600 0000 – 0x1600 7FFF	Supervisory flash	32KB

Note that the SRAM is located in the Arm® Code region for both CPUs (see Table 4). There is no physical memory located in the CPUs' Arm® SRAM regions.

3.2 System resources

3.2.1 Power system

The power system provides assurance that voltage levels are as required for each respective mode and will either delay mode entry (on power-on reset (POR), for example) until voltage levels are as required for proper function or generate resets (brown-out detect (BOD)) when the power supply drops below specified levels. The design guarantees safe chip operation between power supply voltage dropping below specified levels (for example, below 1.7 V) and the reset occurring. There are no voltage sequencing requirements.

The V_{DDD} supply (1.7 to 3.6 V) powers an on-chip buck regulator or a low-dropout regulator (LDO), selectable by the user. In addition, both the buck and the LDO offer a selectable (0.9 or 1.1 V) core operating voltage (V_{CCD}). The selection lets users choose between two system power modes:

- System Low Power (LP) operates V_{CCD} at 1.1 V and offers high performance, with no restrictions on device configuration.
- System Ultra Low Power (ULP) operates V_{CCD} at 0.9 V for exceptional low power, but imposes limitations on clock speeds.

In addition, a backup domain adds an "always on" functionality using a separate power domain supplied by a backup supply (V_{BACKUP}) such as a battery or supercapacitor. It includes a real-time clock (RTC) with alarm feature, supported by a 32.768-kHz watch crystal oscillator (WCO), and power-management IC (PMIC) control. Refer to Power supply considerations for more details.

3.2.2 Power modes

PSOC™ 6 MCU can operate in four system and three CPU power modes. These modes are intended to minimize the average power consumption in an application. For more details on power modes and other power-saving configuration options, see the application note, AN219528: PSOC™ 6 MCU low-power modes and power reduction techniques and the Architecture TRM.

Power modes supported by PSOC™ 6 MCUs, in the order of decreasing power consumption, are:

- System Low Power (LP) – All peripherals and CPU power modes are available at maximum speed
- System Ultra Low Power (ULP) – All peripherals and CPU power modes are available, but with limited speed
- CPU Active – CPU is executing code in system LP or ULP mode
- CPU Sleep – CPU code execution is halted in system LP or ULP mode

- CPU Deep Sleep – CPU code execution is halted and system Deep Sleep is requested in system LP or ULP mode
- System Deep Sleep – Only low-frequency peripherals are available after both CPUs enter CPU Deep Sleep mode
- System Hibernate – Device and I/O states are frozen and the device resets on wakeup

CPU Active, Sleep, and Deep Sleep are standard Arm®-defined power modes supported by the Arm® CPU instruction set architecture (ISA). System LP, ULP, Deep Sleep and Hibernate modes are additional low-power modes supported by PSOC™ 6 MCU.

3.2.3 Clock system

Figure 4 shows that the clock system consists of the following:

- Internal main oscillator (IMO)
- Internal low-speed oscillator (ILO)
- Precision ILO (PILO)
- Watch crystal oscillator (WCO)
- External MHz crystal oscillators (ECOs) for the system and the Bluetooth® LE subsystem
- External clock input
- Phase-locked loop (PLL)
- Frequency-locked loop (FLL)

Clocks may be buffered and brought out to a pin on a smart I/O port.

The default clocking when the application starts is CLK_HF[0] being driven by the IMO and the FLL. CLK_HF[0], clk_fast, clk_peri, and clk_slow are all either 50 MHz (LP mode) or 25 MHz (ULP mode). All other clocks, including all peripheral clocks, are off.

3.2.4 Internal Main Oscillator (IMO)

The IMO is the primary source of internal clocking. It is trimmed during testing to achieve the specified accuracy. The IMO default frequency is 8 MHz and tolerance is ±2%.

3.2.5 Internal Low-speed Oscillator (ILO)

The ILO is a very low power oscillator, nominally 32 kHz, which operates in all power modes. The ILO can be calibrated against a higher accuracy clock for better accuracy.

Precision ILO (PILO)

PILO is a 32.768-kHz clock that can provide a more accurate clock than ILO when periodically calibrated using a high-accuracy clock such as the ECO.

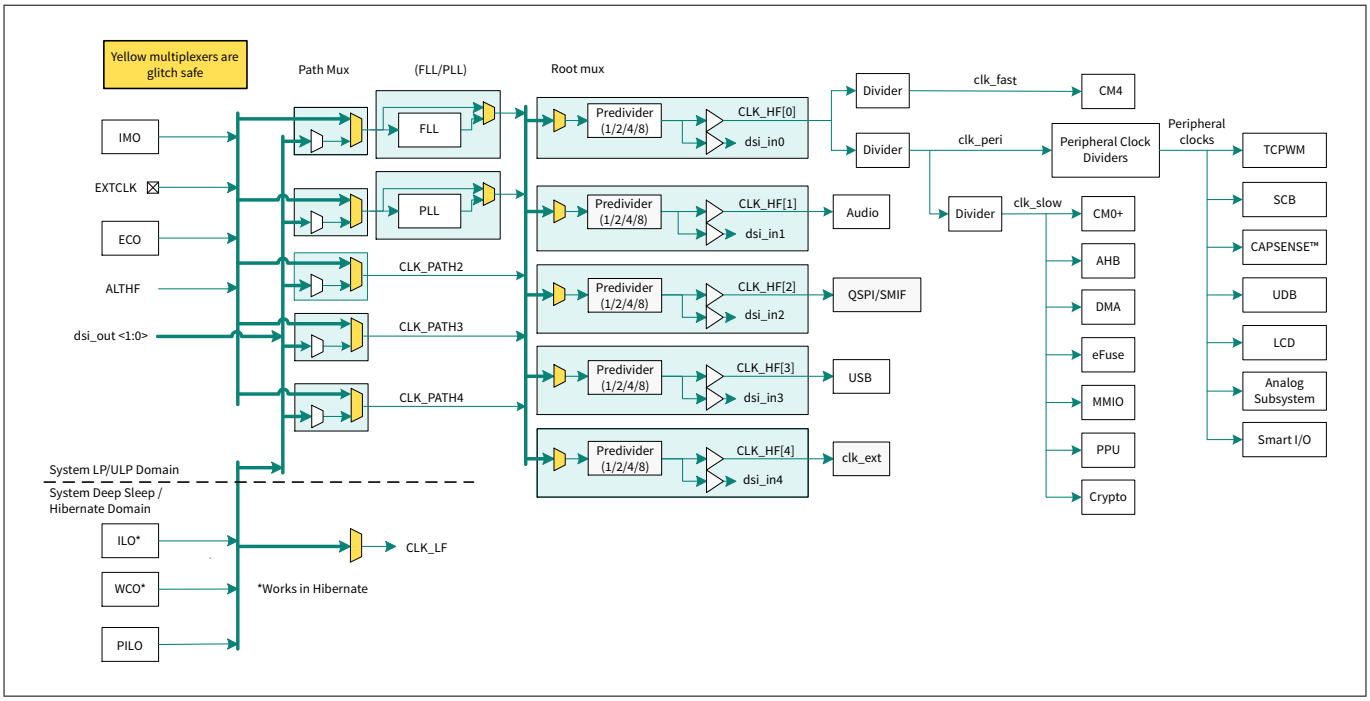

Figure 4 **Clocking diagram**

3.2.6 External Crystal Oscillators

Figure 5 shows all of the external crystal oscillator circuits for this product line. The component values shown are typical; check the Table 46 for the crystal values, and the crystal datasheet for the load capacitor values. The ECO and WCO require balanced external load capacitors. The Bluetooth® LE oscillator does not require external load capacitors. For more information, see the TRM and AN218241 PSOC™ 6 MCU hardware design considerations.

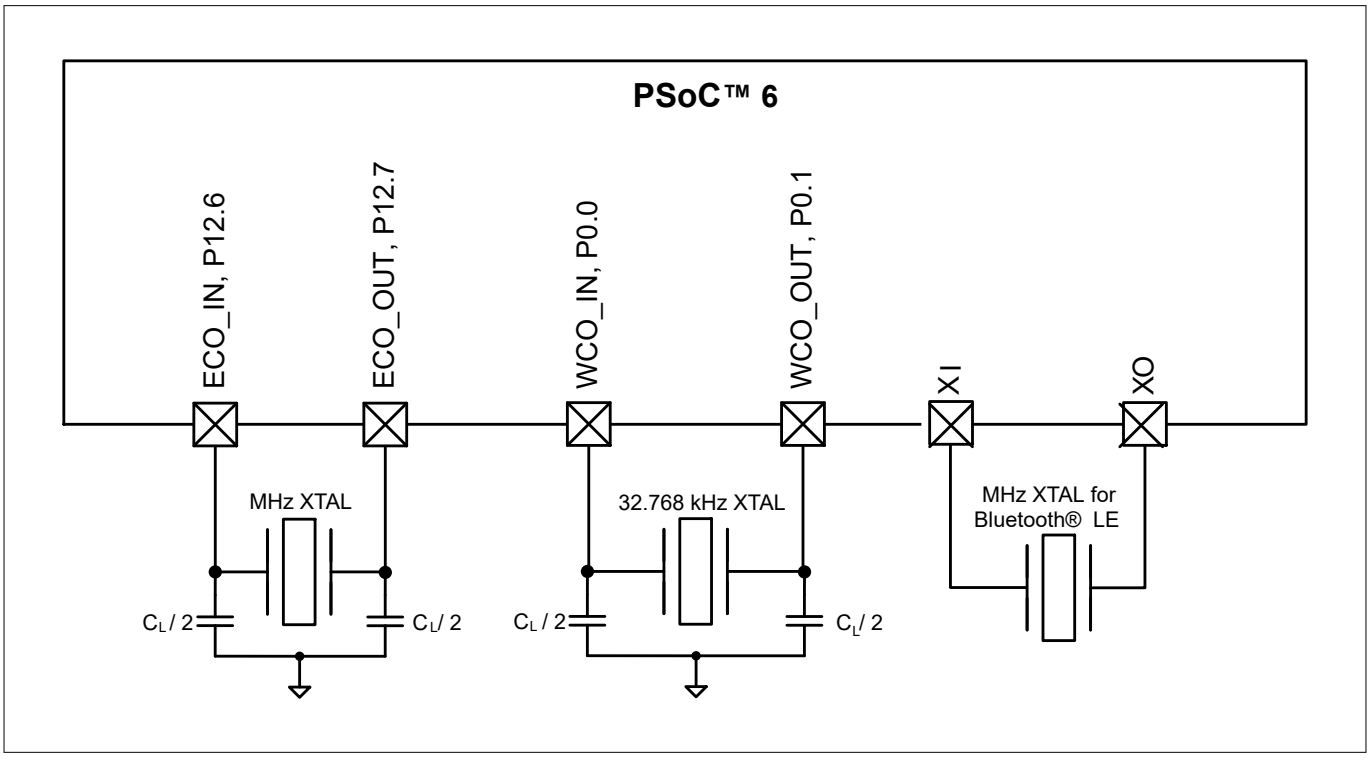

Figure 5 **Oscillator circuits**

If the ECO is used, note that its performance is affected by GPIO switching noise. GPIO ports should be used as Table 6 shows. See also Table 46 for additional restrictions for general analog subsystem use.

Table 6 ECO usage guidelines

Ports	Max Frequency	Drive Strength for V_{DDD} ≤ 2.7 V	Drive Strength for V_{DDD} > 2.7 V
Port 11	60 MHz for SMIF (QSPI)	DRIVE_SEL 2	DRIVE_SEL 3
Ports 12 and 13	Slow slew rate setting	No restrictions	No restrictions

3.2.7 Watchdog timers (WDT, MCWDT)

PSOC™ 6 MCU has one WDT and two multi-counter WDTs (MCWDTs). The WDT has a 16-bit free-running counter. Each MCWDT has two 16-bit counters and one 32-bit counter, with multiple operating modes. All of the 16-bit counters can generate a watchdog device reset. All of the counters can generate an interrupt on a match event.

The WDT is clocked by the ILO. It can do interrupt/wakeup generation in system LP/ULP, Deep Sleep, and Hibernate power modes. The MCWDTs are clocked by LFCLK (ILO or WCO). It can do periodic interrupt/wakeup generation in system LP/ULP and Deep Sleep power modes.

3.2.8 Clock dividers

Integer and fractional clock dividers are provided for peripheral use and timing purposes. There are:

- Eight 8-bit clock dividers
- Sixteen 16-bit integer clock dividers
- Four 16.5-bit fractional clock dividers
- One 24.5-bit fractional clock divider

3.2.9 Trigger routing

PSOC™ 6 MCU contains a trigger multiplexer block. This is a collection of digital multiplexers and switches that are used for routing trigger signals between peripheral blocks and between GPIOs and peripheral blocks.

There are two types of trigger routing. Trigger multiplexers have reconfigurability in the source and destination. There are also hardwired switches called “one-to-one triggers”, which connect a specific source to a destination. The user can enable or disable the route.

3.2.10 Reset

PSOC™ 6 MCU can be reset from a variety of sources:

- Power-on reset (POR) to hold the device in reset while the power supply ramps up to the level required for the device to function properly. POR activates automatically at power-up.
- Brown-out detect (BOD) reset to monitor the digital voltage supply V_{DDD} and generate a reset if V_{DDD} falls below the minimum required logic operating voltage.
- External reset dedicated pin (XRES) to reset the device using an external source. The XRES pin is active low. It can be connected either to a pull-up resistor to V_{DDD}, or to an active drive circuit, as Figure 6 shows. If a pull-up resistor is used, select its value to minimize current draw when the pin is pulled low; 4.7 kΩ to 100 kΩ is typical.

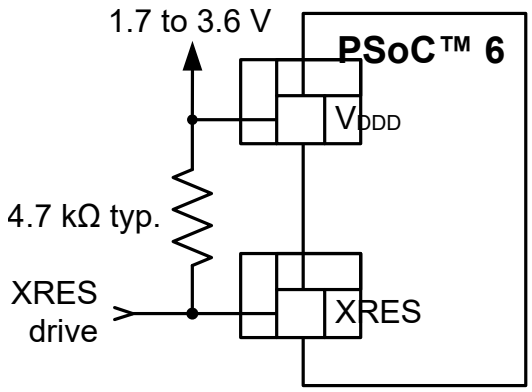

Figure 6 XRES connection diagram

- Watchdog timer (WDT or MCWDT) to reset the device if firmware fails to service it within a specified timeout period.
- Software-initiated reset to reset the device on demand using firmware.
- Logic-protection fault can trigger an interrupt or reset the device if unauthorized operating conditions occur; for example, reaching a debug breakpoint while executing privileged code.
- Hibernate wakeup reset to bring the device out of the system Hibernate low-power mode.

Reset events are asynchronous and guarantee reversion to a known state. Some of the reset sources are recorded in a register, which is retained through reset and allows software to determine the cause of the reset.

3.3 Bluetooth® LE Radio and Subsystem

This product line incorporates a Bluetooth® LE subsystem that contains the Physical Layer (PHY) and Link Layer (LL) engines with an embedded security engine. Infineon also provides extensive driver library and middleware support for Bluetooth® LE; see ModusToolbox™ software.

The physical layer consists of the digital PHY and the RF transceiver that transmits and receives Gaussian frequency shift keying (GFSK) packets at 2 Mbps over a 2.4-GHz ISM band, which is compliant with Bluetooth® LE Specification 5.0.

The baseband controller is a composite hardware and firmware implementation that supports both master and slave modes. Key protocol elements, such as HCI and link control, are implemented in firmware. Time-critical functional blocks, such as encryption, CRC, data whitening, and access code correlation, are implemented in hardware (in the LL engine).

The RF transceiver contains an integrated balun, which provides a single-ended RF port pin to drive a 50-Ω antenna via a matching/filtering network. In the receive direction, this block converts the RF signal from the antenna to a digital bit stream after performing GFSK demodulation. In the transmit direction, this block performs GFSK modulation and then converts a digital baseband signal to a radio frequency before transmitting it through the antenna.

Key features, implemented in hardware and firmware, are as follows:

- Master and slave single-mode protocol stack with logical link control and adaptation protocol (L2CAP), attribute (ATT), and security manager (SM) protocols
- API access to generic attribute profile (GATT), generic access profile (GAP), and L2CAP
- L2CAP connection-oriented channel (Bluetooth® 4.1 feature)
- GAP features
  - Broadcaster, Observer, Peripheral, and Central roles

- Security Mode 1: Level 1, 2, 3, and 4; Security Mode 2: Level 1 and 2
- User-defined advertising data
- Multiple bond support

- GATT features
  - GATT Client and Server
  - Supports GATT sub-procedures
  - 32-bit universally unique identifier (UUID) (Bluetooth® 4.1 feature)
- Security Manager (SM)
  - Pairing methods: Just works, Passkey Entry, and Out of Band
  - LE Secure Connection Pairing model
  - Authenticated man-in-the-middle (MITM) protection and data signing
- Link Layer (LL)
  - Master and Slave roles
  - 128-bit AES engine
  - Low-duty cycle advertising
  - LE Ping
  - LL privacy 1.2 (Bluetooth® 4.2 feature)
  - Data length extension (Bluetooth® 4.2 feature)
- Supports all SIG-adopted Bluetooth® LE profiles

Power consumption for Advertisement (1.28s, 31-byte packets, 0 dBm TX output power) and Connection (300 ms, 0-byte packets, 0 dBm TX output power) are 42 µW and 70 µW respectively

3.4 Programmable analog subsystem

3.4.1 12-bit SAR ADC

The 12-bit, 1-Msps SAR ADC can operate at a maximum clock rate of 18 MHz and requires a minimum of 18 clocks at that frequency to do a 12-bit conversion. One of three internal references may be used for the ADC reference voltage: V_{DDA}, $V_{DDA/2}$, and an analog reference (AREF). AREF is nominally 1.2 V, trimmed to ±1%; see Table 24. An external reference may also be used, by driving the V_{REF} pin. When using $V_{DDA/2}$ or AREF as a reference, an external bypass capacitor may be connected to the V_{REF} pin to improve performance in noisy conditions. These reference options allow ratio-metric readings or absolute readings at the accuracy of the reference used. The input range of the ADC is the full supply voltage between V_{SS} and V_{DDA}/V_{DDIOA}. The SAR ADC may be configured with a mix of single-ended and differential signals in the same configuration.

The SAR ADC's sample-and-hold (S/H) aperture is programmable to allow sufficient time for signals with a high impedance to settle sufficiently, if required. System performance will be 65 dB for true 12-bit precision provided appropriate references are used and system noise levels permit it.

The SAR is connected to a fixed set of pins through an input multiplexer. The multiplexer cycles through the selected channels autonomously (sequencer scan) and does so with zero switching overhead (that is, the aggregate sampling bandwidth is equal to 1 Msps whether it is for a single channel or distributed over several channels). The result of each channel is buffered, so that an interrupt may be triggered only when a full scan of all channels is complete. Also, a pair of range registers can be set to detect and cause an interrupt if an input exceeds a minimum and/or maximum value. This allows fast detection of out-of-range values without having to wait for a sequencer scan to be completed and the CPU to read the values and check for out-of-range values in software. The SAR can also be connected, under firmware control, to most other GPIO pins via the Analog Multiplexer Bus (AMUXBUS). The SAR is not available in Deep Sleep and Hibernate modes as it requires a high -speed clock (up to 18 MHz). The SAR operating range is 1.71 to 3.6 V.

ADC accuracy is affected by GPIO switching noise. To improve accuracy, implement the GPIO port restrictions listed in Table 7. In addition, there should be no switching outputs on ports 9 and 10.

3.4.2 Temperature sensor

An on-chip temperature sensor is part of the SAR and may be scanned by the SAR ADC. It consists of a diode, which is biased by a current source that can be disabled to save power. The temperature sensor may be connected directly to the SAR ADC as one of the measurement channels. The ADC digitizes the temperature sensor's output and a Infineon-supplied software function may be used to convert the reading to temperature which includes calibration and linearization.

3.4.3 12-bit digital-analog converter

There is a 12-bit voltage mode DAC on the chip, which can settle in less than 2 µs. The DAC may be driven by the DMA controllers to generate user-defined waveforms. The DAC output from the chip can either be the resistive ladder output (highly linear near ground) or a buffered output using an opamp in the CTBm block.

3.4.4 Continuous Time Block mini (CTBm) with two opamps

This block consists of two opamps, which have their inputs and outputs connected to pins and other analog blocks, as Figure 7 shows. They have three power modes (high, medium, and low) and a comparator mode. The opamps can be used to buffer SAR inputs and DAC outputs. The non-inverting inputs of these opamps can be connected to either of two pins, thus allowing independent sensors to be used at different times. The pin selection can be made via firmware. The opamps also support operation in system Deep Sleep mode, with lower performance and reduced power consumption.

3.4.5 Low-power comparators

Two low-power comparators are provided, which can operate in all power modes. This allows other analog system resources to be disabled while retaining the ability to monitor external voltage levels during system Deep Sleep and Hibernate modes. The comparator outputs are normally synchronized to avoid metastability unless operating in an asynchronous power mode (Hibernate) where the system wake-up circuit is activated by a comparator-switch event.

Figure 7 shows an overview of the analog subsystem. This diagram is a high-level abstraction. See the Architecture TRM for detailed connectivity information.

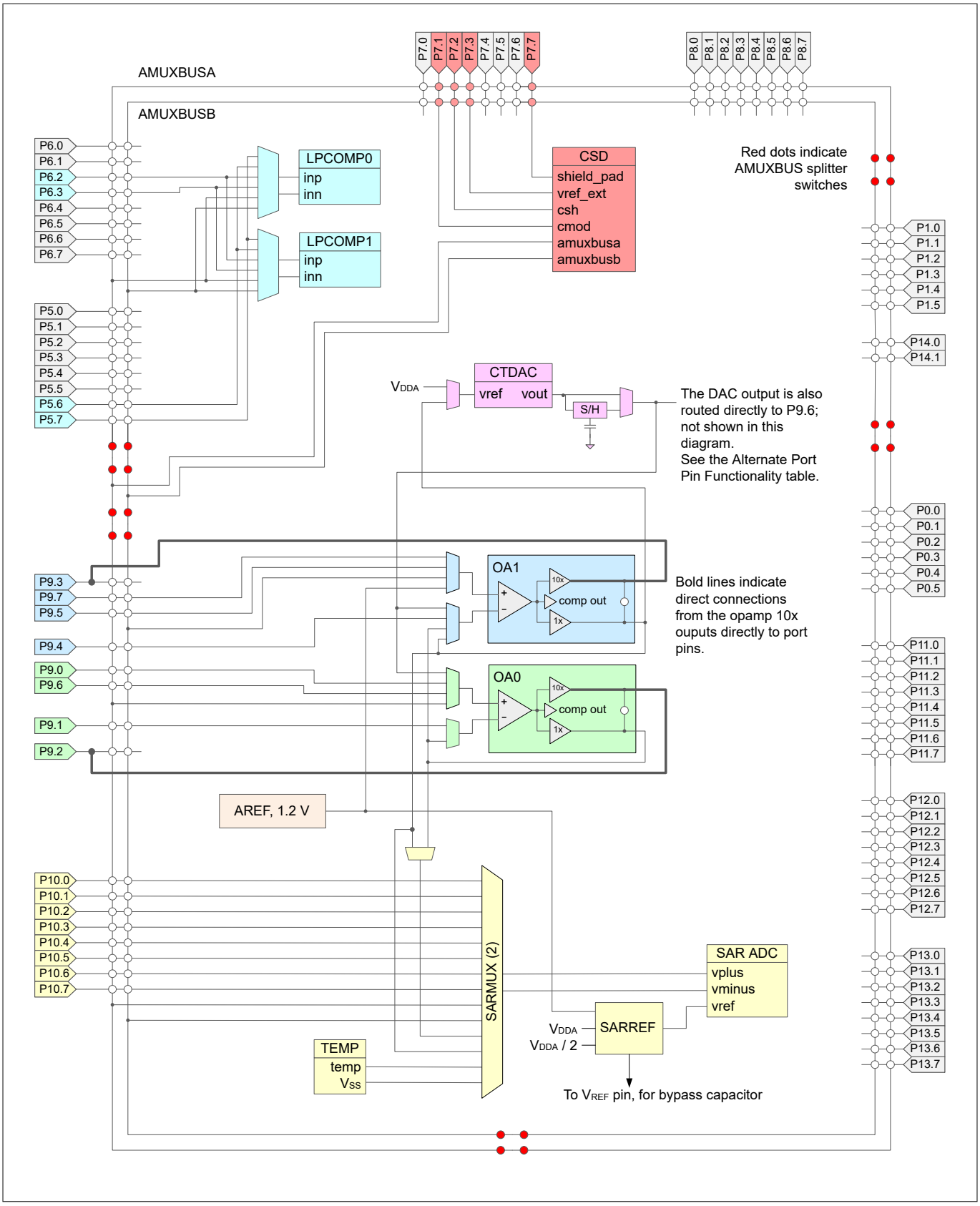

Figure 7 **Analog subsystem**

3.5 Programmable digital

3.5.1 Smart I/O

Smart I/O is a programmable logic fabric that enables Boolean operations on signals traveling from device internal resources to the GPIO pins or on signals traveling into the device from external sources. A Smart I/O block sits between the GPIO pins and the high-speed I/O matrix (HSIOM) and is dedicated to a single port.

There are two Smart I/O blocks: one on Port 8 and one on Port 9. When Smart I/O is not enabled, all signals on Port 8 and Port 9 bypass the Smart I/O hardware.

Smart I/O supports:

- System Deep Sleep operation
- Boolean operations without CPU intervention
- Asynchronous or synchronous (clocked) operation

Each Smart I/O block contains a data unit (DU) and eight lookup tables (LUTs).

The DU:

- Performs unique functions based on a selectable opcode.
- Can source input signals from internal resources, the GPIO port, or a value in the DU register.

Each LUT:

- Has three selectable input sources. The input signals may be sourced from another LUT, an internal resource, an external signal from a GPIO pin, or from the DU.
- Acts as a programmable Boolean logic table.
- Can be synchronous or asynchronous.

3.5.2 Universal digital blocks (UDBs)

This product line has 12 UDBs. Each UDB is a collection of uncommitted logic (PLD) and nano-CPU (datapath) optimized to create common embedded peripherals and custom functionality, as Figure 8 shows. UDB datapaths are 8 bits wide, and can be chained to form 16, 24, and 32-bit functions. Included with the UDBs is the digital system interconnect (DSI), which routes signals among UDBs, fixed function peripherals, I/O pins and other system blocks to implement full featured device connectivity. The DSI enables routing between any digital function and any pin. Port adapter blocks extend the UDBs to provide an interface to the GPIOs through the HSIOM.

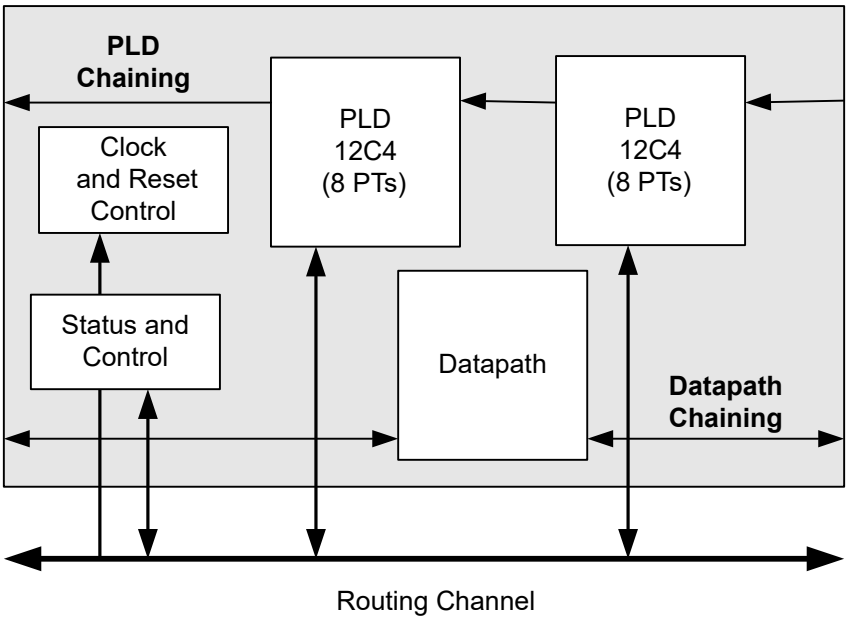

Figure 8 **UDB block diagram**

3.6 Fixed-function digital

3.6.1 Timer/counter/pulse-width modulator (TCPWM) block

- The TCPWM supports the following operational modes:
  - Timer-counter with compare
  - Timer-counter with capture
  - Quadrature decoding
  - Pulse width modulation (PWM)
  - Pseudo-random PWM
  - PWM with dead time
- Up, down, and up/down counting modes.
- Clock prescaling (division by 1, 2, 4, ... 64, 128)
- Double buffering of compare/capture and period values
- Underflow, overflow, and capture/compare output signals
- Supports interrupt on:
  - Terminal count – Depends on the mode; typically occurs on overflow or underflow
  - Capture/compare – The count is captured to the capture register or the counter value equals the value in the compare register
- Complementary output for PWMs
- Selectable start, reload, stop, count, and capture event signals for each TCPWM; with rising edge, falling edge, both edges, and level trigger options. The TCPWM has a Kill input to force outputs to a predetermined state.

In this device there are:

- Eight 32-bit TCPWMs
- Twenty-four 16-bit TCPWMs

3.6.2 Serial communication blocks (SCB)

This product line has nine SCBs:

- Eight can implement either I²C, UART, or SPI.
- One SCB (SCB #8) can operate in system Deep Sleep mode with an external clock; this SCB can be either SPI slave or I²C slave.

I2C Mode: The SCB can implement a full multi-master and slave interface (it is capable of multimaster arbitration). This block can operate at speeds of up to 1 Mbps (Fast Mode Plus). It also supports EZI²C, which creates a mailbox address range and effectively reduces I²C communication to reading from and writing to an array in the memory. The SCB supports a 256-byte FIFO for receive and transmit.

The I²C peripheral is compatible with I²C standard-mode, Fast Mode, and Fast Mode Plus devices as defined in the NXP I²C-bus specification and user manual (UM10204). The I²C bus I/O is implemented with GPIO in open-drain modes.

UART Mode: This is a full-feature UART operating at up to 8 Mbps. It supports automotive single-wire interface (LIN), infrared interface (IrDA), and SmartCard (ISO7816) protocols, all of which are minor variants of the basic UART protocol. In addition, it supports the 9-bit multiprocessor mode that allows the addressing of peripherals connected over common Rx and Tx lines. Common UART functions such as parity error, break detect, and frame error are supported. A 256-byte FIFO allows much greater CPU service latencies to be tolerated.

SPI Mode: The SPI mode supports full Motorola SPI, TI Secure Simple Pairing (SSP) (essentially adds a start pulse that is used to synchronize SPI Codecs), and National Microwire (half-duplex form of SPI). The SPI block supports an EZSPI mode in which the data interchange is reduced to reading and writing an array in memory. The SPI interface operates with a 25-MHz clock.

3.6.3 USB Full-Speed device/host Interface

PSOC™ 6 has a USB full-speed interface that can be configured either as a USB device or a USB host. The USB device can have up to eight endpoints. A 512-byte SRAM buffer is provided, and DMA-based data transfer is supported. The USB host supports both full-speed (12 Mbps) and low-speed (1.5 Mbps) devices, and is designed to be compliant with USB Specification Revision 2.0. For more details on USB device/host features, see Technical Reference Manual.

***Note**: The USB pins are not frozen in system hibernate mode.*

3.6.4 QSPI Interface Serial Memory Interface (SMIF)

A serial memory interface is provided, running at up to 80 MHz. It supports single, dual, quad, dual-quad and octal SPI configurations, and supports up to four external memory devices. It supports two modes of operation:

- Memory-mapped I/O (MMIO), a command mode interface that provides data access via the SMIF registers and FIFOs
- Execute in Place (XIP), in which AHB reads and writes are directly translated to SPI read and write transfers.

In XIP mode, the external memory is mapped into the PSOC™ 6 MCU internal address space, enabling code execution directly from the external memory. To improve performance, a 4-KB cache is included. XIP mode also supports AES-128 on-the-fly encryption and decryption, enabling secured storage and access of code and data in the external memory.

3.6.5 LCD

This block drives LCD commons and segments; routing is available to most of the GPIOs. One to eight of the GPIOs must be used for commons, the rest can be used for segments.

The LCD block has two modes of operation: high speed (8 MHz) and low speed (32 kHz). Both modes operate in system LP and ULP modes. Low-speed mode operates with reduced contrast in system Deep Sleep mode - review the number of common and segment lines, viewing angle requirements, and prototype performance before using this mode.

3.7 GPIO

This product line has up to 84 GPIOs, which implement:

- Eight drive strength modes:
  - Analog input mode (input and output buffers disabled)
  - Input only
  - Weak pull-up with strong pull-down
  - Strong pull-up with weak pull-down
  - Open drain with strong pull-down
  - Open drain with strong pull-up
  - Strong pull-up with strong pull-down
  - Weak pull-up with weak pull-down
- Input threshold select (CMOS or LVTTL)
- Hold mode for latching previous state (used for retaining the I/O state in system Hibernate mode)
- Selectable slew rates for dV/dt-related noise control to improve EMI

The pins are organized in logical entities called ports, which are up to 8 pins in width. Data output and pin state registers store, respectively, the values to be driven on the pins and the input states of the pins.

Every pin can generate an interrupt if enabled; each port has an interrupt request (IRQ) associated with it.

The port 1 pins are capable of overvoltage-tolerant (OVT) operation, where the input voltage may be higher than V_{DDD}. OVT pins are commonly used with I^2C, to allow powering the chip OFF while maintaining a physical connection to an operating I^2C bus without affecting its functionality.

GPIO pins can be ganged to source or sink higher values of current. GPIO pins, including OVT pins, may not be pulled up higher than the absolute maximum; see Electrical specifications.

During power-on and reset, the pins are forced to the analog input drive mode, with input and output buffers disabled, so as not to crowbar any inputs and/or cause excess turn-on current.

A multiplexing network known as the high-speed I/O matrix (HSIOM) is used to multiplex between various peripheral and analog signals that may connect to an I/O pin.

Analog performance is affected by GPIO switching noise. In order to get the best analog performance, the following frequency and drive mode constraints must be applied. The DRIVE_SEL values (refer to Table 7) represent drive strengths (see the Architecture and Register TRMs for further detail).

See also Table 6 for additional restrictions for ECO use.

Table 7 DRIVE_SEL Values

Ports	Max frequency	Drive Strength for V_{DDD} ≤ 2.7 V	Drive Strength for V_{DDD} > 2.7 V
Port 0	8 MHz	DRIVE_SEL 2	DRIVE_SEL 3

(table continues...)

Table 7 (continued) DRIVE_SEL Values

Ports	Max frequency	Drive Strength for V_{DDD} ≤ 2.7 V	Drive Strength for V_{DDD} > 2.7 V
Port 1	1 MHz; slow slew rate, 2 outputs max		
Ports 5 to 10	16 MHz; 25 MHz for SPI		
Ports 11 to 13	80 MHz for SMIF (QSPI).	DRIVE_SEL 1	DRIVE_SEL 2
Ports 9 and 10	8 MHz; slow slew rate setting for TQFP Packages for ADC performance	No restrictions	No restrictions

3.8 Special-function peripherals

3.8.1 Audio subsystem

This subsystem consists of the following hardware blocks:

- One Inter-IC Sound (I^2S) interface
- Two pulse-density modulation (PDM) to pulse-code modulation (PCM) decoder channels

The I^2S interface implements two independent hardware FIFO buffers – TX and RX, which can operate in master or slave mode. The following features are supported:

- Multiple data formats – I^2S, left-justified, Time Division Multiplexed (TDM) mode A, and TDM mode B
- Programmable channel/word lengths – 8/16/18/20/24/32 bits
- Internal/external clock operation. Up to 192 ksps
- Interrupt mask events – trigger, not empty, full, overflow, underflow, watchdog
- Configurable FIFO trigger level with DMA support

The I^2S interface is commonly used to connect with audio codecs, simple DACs, and digital microphones.

The PDM-to-PCM decoder implements a single hardware Rx FIFO that decodes a stereo or mono 1-bit PDM input stream to PCM data output. The following features are supported:

- Programmable data output word length – 16/18/20/24 bits
- Programmable gain amplifier (PGA) for volume control – from –12 dB to +10.5 dB in 1.5 dB steps
- Configurable PDM clock generation. Range from 384 kHz to 3.072 MHz
- Droop correction and configurable decimation rate for sampling; up to 48 ksps
- Programmable high-pass filter gain
- Interrupt mask events – not empty, overflow, trigger, underflow
- Configurable FIFO trigger level with DMA support

The PDM-to-PCM decoder is commonly used to connect to digital PDM microphones. Up to two microphones can be connected to the same PDM Data line.

3.8.2 CAPSENSE™ Subsystem

CAPSENSE™ is supported in PSOC™ 6 MCU through a capacitive sigma-delta (CSD) hardware block. It is designed for high-sensitivity self-capacitance and mutual-capacitance measurements, and is specifically built for user interface solutions.

In addition to CAPSENSE™, the CSD hardware block supports three general-purpose functions. These are available when CAPSENSE™ is not being used. Alternatively, two or more functions can be time-multiplexed in an application under firmware control. The four functions supported by the CSD hardware block are:

- CAPSENSE™
- 10-bit ADC
- Programmable current sources (IDAC)
- Comparator

CAPSENSE™

Capacitive touch sensors are designed for user interfaces that rely on human body capacitance to detect the presence of a finger on or near a sensor. CAPSENSE™ solutions bring elegant, reliable, and simple capacitive touch sensing functions to applications including IoT, industrial, automotive, and home appliances.

The CAPSENSE™ technology offers the following features:

- Best-in-class signal-to-noise ratio (SNR) and robust sensing under harsh and noisy conditions
- Self-capacitance (CSD) and mutual-capacitance (CSX) sensing methods
- Support for various widgets, including buttons, matrix buttons, sliders, touchpads, and proximity sensors
- High-performance sensing across a variety of materials
- Best-in-class liquid tolerance
- SmartSense auto-tuning technology that helps avoid complex manual tuning processes
- Superior immunity against external noise
- Spread-spectrum clocks for low radiated emissions
- Gesture and built-in self-test libraries
- Ultra-low power consumption
- An integrated graphical CAPSENSE™ tuner for real-time tuning, testing, and debugging

CAPSENSE™ sensitivity and accuracy are affected by GPIO switching noise. To improve sensitivity and accuracy, implement the GPIO port restrictions listed in Table 7, and do the following:

- Restrict CAPSENSE™ pins to ports 6 and 7
- There should be no other GPIO output activity on ports 6 and 7
- There should be no more than two GPIO outputs on ports 5 and 8
- Restrict GPIO output switching in ports 5 and 8 to 1 MHz, with slow slew rate setting

ADC

The CAPSENSE™ subsystem slope ADC offers the following features:

- Selectable 8- or 10-bit resolution
- Selectable input range: GND to V_{REF} and GND to V_{DDA} on any GPIO input
- Measurement of V_{DDA} against an internal reference without the use of GPIO or external components

IDAC

The CSD block has two programmable current sources, which offer the following features:

- 7-bit resolution
- Sink and source current modes
- A current source programmable from 37.5 nA to 609 µA
- Two IDACs that can be used in parallel to form one 8-bit IDAC

Comparator

The CAPSENSE™ subsystem comparator operates in the system Low Power and Ultra-Low Power modes. The inverting input is connected to an internal programmable reference voltage and the non-inverting input can be connected to any GPIO via the AMUXBUS.

CAPSENSE™ Hardware Subsystem

Figure 10 shows the high-level hardware overview of the CAPSENSE™ subsystem, which includes a delta sigma converter, internal clock dividers, a shield driver, and two programmable current sources.

The inputs are managed through analog multiplexed buses (AMUXBUS A/B). The input and output of all functions offered by the CSD block can be provided on any GPIO or on a group of GPIOs under software control, with the exception of the comparator output and external capacitors that use dedicated GPIOs.

Self-capacitance is supported by the CSD block using AMUXBUS A, an external modulator capacitor, and a GPIO for each sensor. There is a shield electrode (optional) for self-capacitance sensing. This is supported using AMUXBUS B and an optional external shield tank capacitor (to increase the drive capability of the shield driver) should this be required. Mutual-capacitance is supported by the CSD block using AMUXBUS A, two external integrated capacitors, and a GPIO for transmit and receive electrodes.

The ADC does not require an external component. Any GPIO that can be connected to AMUXBUS A can be an input to the ADC under software control. The ADC can accept V_{DDA} as an input without needing GPIOs (for applications such as battery voltage measurement).

The two programmable current sources (IDACs) in general-purpose mode can be connected to AMUXBUS A or B. They can therefore connect to any GPIO pin. The comparator resides in the delta-sigma converter. The comparator inverting input can be connected to the reference. Both comparator inputs can be connected to any GPIO using AMUXBUS B; see Figure 9. The reference has a direct connection to a dedicated GPIO; see Table 10.

The CSD block can operate in active and sleep CPU power modes, and seamlessly transition between system LP and ULP modes. It can be powered down in system Deep Sleep and Hibernate modes. Upon wakeup from Hibernate mode, the CSD block requires re-initialization. However, operation can be resumed without re-initialization upon exit from Deep Sleep mode, under firmware control.

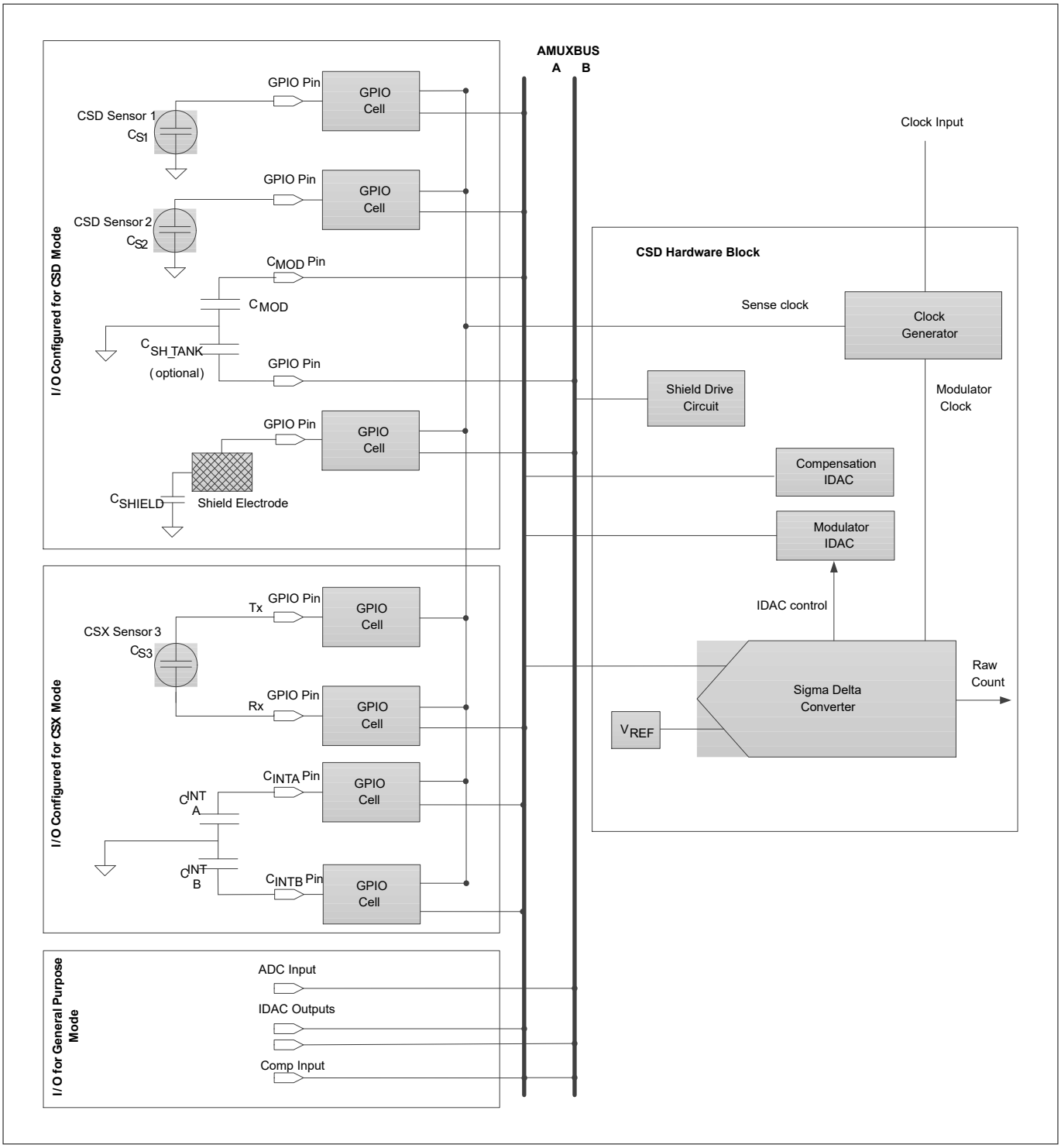

Figure 9 **CAPSENSE™ hardware subsystem**

Figure 10 shows the high-level software overview. Infineon provides middleware libraries for CAPSENSE™, ADC, and IDAC on GitHub to enable quick integration. The Board Support Package for any kit with CAPSENSE™ capabilities automatically includes the CAPSENSE™ library in any application that uses the BSP.

User applications interact only with middleware to implement functions of the CSD block. The middleware interacts with underlying drivers to access hardware as necessary. The CSD driver facilitates time-multiplexing of the CSD hardware if more than one piece of CSD-related middleware is present in a project. It prevents access conflicts in this case.

ModusToolbox™ Software provides a CAPSENSE™ configurator to enable fast library configuration. It also provides a tuner for performance evaluation and real-time tuning of the system. The tuner requires an EZI^{2}C communication interface in the application to enable real-time tuning capability. The tuner can update configuration parameters directly in the device as well as in the configurator.

CAPSENSE™ and ADC middleware use the CSD interrupt to implement non-blocking sensing and A-to-D conversion. Therefore, interrupt service routines are a defined part of the middleware, which must be initialized by the application. Middleware and drivers can operate on either CPU. Infineon recommends using the middleware only in one CPU. If both CPUs must access the CSD driver, memory access should be managed in the application.

Refer to AN85951: PSOC™ 4 and PSOC™ 6 MCU CAPSENSE™ Design Guide for more details on CSX sensing, CSD sensing, shield electrode usage and its benefits, and capacitive system design guidelines.

Refer to the API reference guides for CAPSENSE™, ADC, and IDAC available on GitHub.

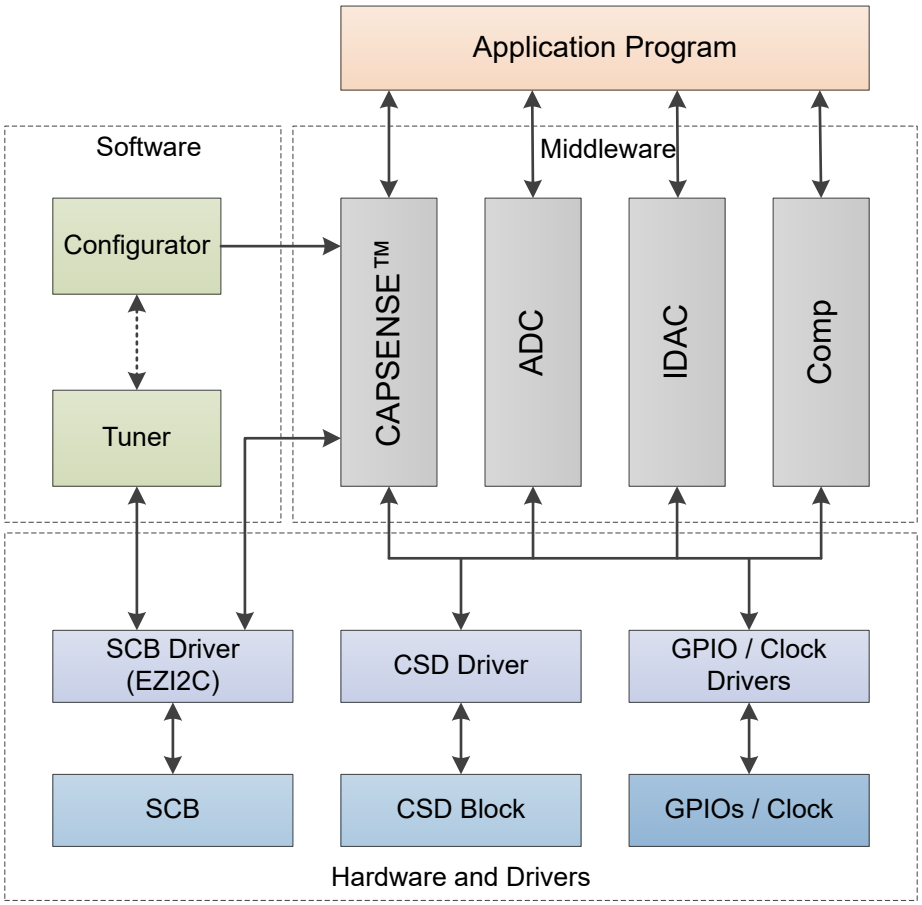

Figure 10 **CAPSENSE™ software/firmware subsystem**

4 Pinouts

***Note**: The CY8C63x6/CY8C63x7 Table 8 and Table 9 contains a spreadsheet with a consolidated list of pinouts and pin alternate functions with HSIOM mapping.*

GPIO ports are powered by V_{DDx} pins as follows:

- P0: V_{BACKUP}
- P1: V_{DDD}. Port 1 pins are overvoltage tolerant (OVT)
- P5, P6, P7, P8: V_{DDIO1}
- P9, P10: V_{DDIOA}, V_{DDA} (V_{DDIOA}, when present, and V_{DDA} must be connected together on the PCB)
- P11, P12, P13: V_{DDIO0}
- P14: V_{DDUSB}

Table 8 Packages and Pin Information

Pin	Packages				
	124-BGA	**116-BGA**	**104-M-CSP (no USB)**	**104-M-CSP (with USB)**	**68-QFN**
V_{DDD}	A13	B1	C6		68
V_{CCD}	B13	A2	C7		67
V_{DDA}	M13	A9	A1		47
V_{DDIOA}	N13	-	-		53
V_{DDIO0}	D11	B3	B6		64
V_{DDIO1}	M4	G10	D1		43
V_{BACKUP}	A10	C1	C9		1
V_{DDUSB}	A2	-	-	H7	-
V_{SS}	C11, D4, D10, K4, K10, M12	B2, B9, D1, H2, H9	D4, D7, F4, G7, P1		GND PAD
V_{SSR}	A1, B1, B2, C3, D1, E3, G2	J1, K2, K3, K4, K5, L1, L3, L4, L5, M3, M8	M3, N9, P3, P6, P7		GND PAD
V_{DD_NS}	A5	H3	G9		9
V_{IND1}	B5	F1	G8		10
V_{IND2}	B4	G1	H8		11
V_{BUCK1}	C4	G2	J8	F9	12
V_{RF}	A4	H1	H9		13
V_{DCDC}	F3	M7	P4		24
V_{DDR1}	C2	L2	L9		15
V_{DDR2}	E2	M1	P9		19
V_{DDR3}	D2	M2	P8		20
DV_{DD}	F2	M6	M4		23
V_{DDR_HVL}	G3	L7	L2		25

(table continues...)

Table 8 (continued) Packages and Pin Information

Pin	Packages				
	124-BGA	116-BGA	104-M-CSP (no USB)	104-M-CSP (with USB)	68-QFN
XRES	A8	E2	E5		8
V_{REF}	N12	B10	-		52
ANT	C1	K1	M9		17
GANT	-	-	-		16, 18
XI	F1	M4	M5		21
XO	E1	M5	P5		22
P0.0	C9	C2	D8		2
P0.1	B9	D3	E6		3
P0.2	A9	E4	D9		4
P0.3	C8	E3	E7		5
P0.4	B8	F3	E8		6
P0.5	C7	D2	E9		7
P1.0	B7	G3	F5		-
P1.1	A7	F2	F6		-
P1.2	C6	J5	-		-
P1.3	B6	J4	F9	-	-
P1.4	A6	J3	F8		-
P1.5	C5	J2	F7		-
P5.0	G1	L6	J7		-
P5.1	H3	K6	J5		-
P5.2	H2	J6	J6		-
P5.3	H1	K7	H7	H6	-
P5.4	J3	J7	H6	H5	-
P5.5	J2	L8	J4		-
P5.6	J1	M9	K3		-
P5.7	K1	-	K4		-
P6.0	K2	K8	J3		26
P6.1	K3	J8	K2		28
P6.2	L3	L9	M2		29
P6.3	L2	K9	L1		30
P6.4	L1	J9	J2		31
P6.5	M2	M10	K1		32

(table continues...)

Table 8 (continued) Packages and Pin Information

Pin	Packages				
	124-BGA	116-BGA	104-M-CSP (no USB)	104-M-CSP (with USB)	68-QFN
P6.6	M1	L10	N2		33
P6.7	N2	K10	M1		34
P7.0	N3	J10	N1		35
P7.1	M3	H10	G6		36
P7.2	N4	H8	H4		37
P7.3	N1	H7	G5		38
P7.4	L4	H6	H3		39
P7.5	N5	G9	H2		40
P7.6	M5	G8	G3		41
P7.7	L5	G7	G2		42
P8.0	N6	F10	G4		44
P8.1	M6	F9	G1		45
P8.2	L6	F8	F3		46
P8.3	N7	F7	F2		-
P8.4	M7	G6	F1		-
P8.5	L7	E9	E3		-
P8.6	N8	E8	E1		-
P8.7	M8	E7	E2		-
P9.0	L9	D10	D2		48
P9.1	M9	D9	C1		49
P9.2	N9	D8	D3		50
P9.3	L8	D7	B1		51
P9.4	N10	C10	-		-
P9.5	M10	C9	-		-
P9.6	L10	C8	-		-
P9.7	N11	C7	-		-
P10.0	M11	B8	C2		54
P10.1	L13	A8	B2		55
P10.2	L12	F6	C3		-
P10.3	L11	E6	E4		-
P10.4	K13	D6	A2		-
P10.5	K12	B7	A3		-

(table continues...)

Table 8 (continued) Packages and Pin Information

Pin	Packages				
	124-BGA	116-BGA	104-M-CSP (no USB)	104-M-CSP (with USB)	68-QFN
P10.6	K11	A7	D5		–
P10.7	J13	–	B3		–
P11.0	J12	F5	C4		56
P11.1	J11	E5	C5		57
P11.2	H13	D5	D6		58
P11.3	H12	C6	B4		59
P11.4	H11	B6	A4		60
P11.5	G13	A6	B5		61
P11.6	G12	B5	A5		62
P11.7	G11	A5	A6		63
P12.0	F13	A4	B7		–
P12.1	F12	B4	A7		–
P12.2	F11	C4	B8		–
P12.3	E13	A3	A8		–
P12.4	E12	C5	C8		–
P12.5	E11	D4	–		–
P12.6	D13	G5	–		65
P12.7	D12	H5	–		66
P13.0	A12	H4	A9		–
P13.1	C13	G4	B9		–
P13.2	C12	–	–		–
P13.3	B12	–	–		–
P13.4	B11	–	–		–
P13.5	A11	–	–		–
P13.6	C10	F4	–		–
P13.7	B10	C3	–		–
P14.0 / USBDP	B3	–	–	J8	–
P14.1 / USBDM	A3	–	–	J9	–
NC	D3	–	H5, J9, P2	P2	14, 27

***Note**: Balls H5 and J9 are No-Connects (NC) in the 104-M-CSP package.*

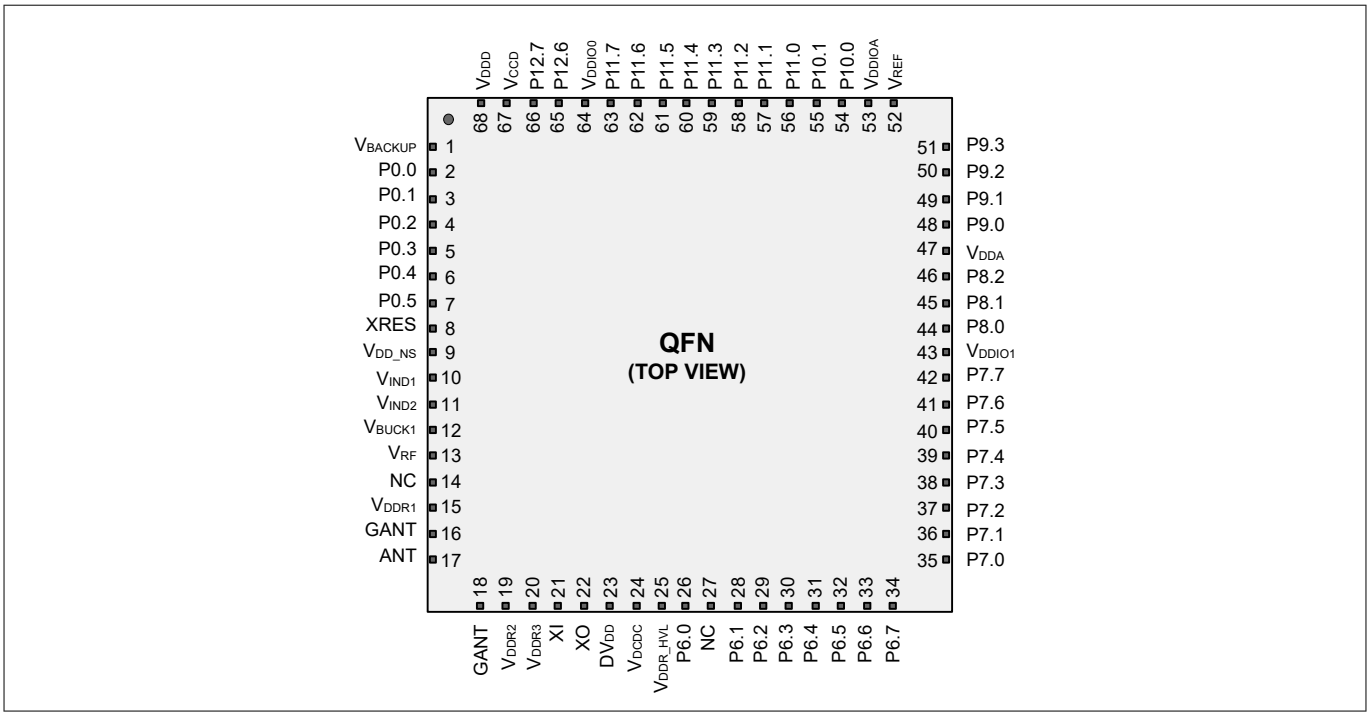

Figure 11 **Device Pinout for 68-QFN Package**[2)]

Note: *If the USB pins are not used, connect V_{DDUSB} to ground and leave the P14.0/USBDP and P14.1/USBDM pins unconnected.*

Each Port Pin has multiple alternate functions. These are defined in Table 9.

2 The center pad on the QFN package should be connected to PCB ground relative to device VDDx for best mechanical, thermal, and electrical performance. For more information, see AN72845, Design Guidelines for QFN Devices.

Table 9 Multiple alternate functions

Port/Pin	ACT #0	ACT #1	DS #2	ACT #4	ACT #5	ACT #6	ACT #7	ACT #8	ACT #9	ACT #10	ACT #12	ACT #13	ACT #14	ACT #15	DS #4	DS #5	DS #6
P0.0	tcpwm[0].line[0]:0	tcpwm[1].line[0]:0		srss.ext_clk:0				scb[0].spi_select1:0			peri.tr_io_input[0]:0						
P0.1	tcpwm[0].line_compl[0]:0	tcpwm[1].line_compl[0]:0						scb[0].spi_select2:0			peri.tr_io_input[1]:0					cpuss.swj_trstn	
P0.2	tcpwm[0].line[1]:0	tcpwm[1].line[1]:0				scb[0].uart_rx:0	scb[0].i2c_scl:0	scb[0].spi_mosi:0									
P0.3	tcpwm[0].line_compl[1]:0	tcpwm[1].line_compl[1]:0				scb[0].uart_tx:0	scb[0].i2c_sda:0	scb[0].spi_miso:0									
P0.4	tcpwm[0].line[2]:0	tcpwm[1].line[2]:0				scb[0].uart_rts:0		scb[0].spi_clk:0				peri.tr_io_output[0]:2					
P0.5	tcpwm[0].line_compl[2]:0	tcpwm[1].line_compl[2]:0		srss.ext_clk:1		scb[0].uart_cts:0		scb[0].spi_select0:0				peri.tr_io_output[1]:2					

(table continues...)

Table 9 (continued) Multiple alternate functions

Port/Pin	ACT #0	ACT #1	DS #2	ACT #4	ACT #5	ACT #6	ACT #7	ACT #8	ACT #9	ACT #10	ACT #12	ACT #13	ACT #14	ACT #15	DS #4	DS #5	DS #6
P1.0	tcpwm[0].line[3]:0	tcpwm[1].line[3]:0				scb[7].uart_rx:0	scb[7].i2c_scl:0	scb[7].spi_mosi:0			peri.tr_io_input[2]:0						
P1.1	tcpwm[0].line_compl[3]:0	tcpwm[1].line_compl[3]:0				scb[7].uart_tx:0	scb[7].i2c_sda:0	scb[7].spi_miso:0			peri.tr_io_input[3]:0						
P1.2	tcpwm[0].line[4]:4	tcpwm[1].line[12]:1				scb[7].uart_rts:0		scb[7].spi_clk:0									
P1.3	tcpwm[0].line_compl[4]:4	tcpwm[1].line_compl[12]:1				scb[7].uart_cts:0		scb[7].spi_select0:0									
P1.4	tcpwm[0].line[5]:4	tcpwm[1].line[13]:1						scb[7].spi_select1:0									
P1.5	tcpwm[0].line_compl[5]:4	tcpwm[1].line_compl[14]:1						scb[7].spi_select2:0									

(table continues...)

Table 9 (continued) Multiple alternate functions

Port/Pin	ACT #0	ACT #1	DS #2	ACT #4	ACT #5	ACT #6	ACT #7	ACT #8	ACT #9	ACT #10	ACT #12	ACT #13	ACT #14	ACT #15	DS #4	DS #5	DS #6
P5.0	tcpwm[0].line[4]:0	tcpwm[1].line[4]:0				scb[5].uart_rx:0	scb[5].i2c_scl:0	scb[5].spi_mosi:0		audioss.clk_i2s_if	peri.tr_io_input[10]:0						
P5.1	tcpwm[0].line_compl[4]:0	tcpwm[1].line_compl[4]:0				scb[5].uart_tx:0	scb[5].i2c_sda:0	scb[5].spi_miso:0		audioss.tx_sck	peri.tr_io_input[11]:0						
P5.2	tcpwm[0].line[5]:0	tcpwm[1].line[5]:0				scb[5].uart_rts:0		scb[5].spi_clk:0		audioss.tx_ws							
P5.3	tcpwm[0].line_compl[5]:0	tcpwm[1].line_compl[5]:0				scb[5].uart_cts:0		scb[5].spi_select0:0		audioss.tx_sdo							
P5.4	tcpwm[0].line[6]:0	tcpwm[1].line[6]:0						scb[5].spi_select1:0		audioss.rx_sck							
P5.5	tcpwm[0].line_compl[6]:0	tcpwm[1].line_compl[6]:0						scb[5].spi_select2:0		audioss.rx_ws							

(table continues...)

Table 9 (continued) Multiple alternate functions

Port/Pin	ACT #0	ACT #1	DS #2	ACT #4	ACT #5	ACT #6	ACT #7	ACT #8	ACT #9	ACT #10	ACT #12	ACT #13	ACT #14	ACT #15	DS #4	DS #5	DS #6
P5.6	tcpwm[0].line[7]:0	tcpwm[1].line[7]:0						scb[5].spi_select3:0		audioss.rx_sdi							
P5.7	tcpwm[0].line_compl[7]:0	tcpwm[1].line_compl[7]:0						scb[3].spi_select3:0									
P6.0	tcpwm[0].line[0]:1	tcpwm[1].line[8]:0	scb[8].i2c_scl:0			scb[3].uart_rx:0	scb[3].i2c_scl:0	scb[3].spi_mosi:0				cpuss.fault_out[0]					scb[8].spi_mosi:0
P6.1	tcpwm[0].line_compl[0]:1	tcpwm[1].line_compl[8]:0	scb[8].i2c_sda:0			scb[3].uart_tx:0	scb[3].i2c_sda:0	scb[3].spi_miso:0				cpuss.fault_out[1]					scb[8].spi_miso:0
P6.2	tcpwm[0].line[1]:1	tcpwm[1].line[9]:0				scb[3].uart_rts:0		scb[3].spi_clk:0									scb[8].spi_clk:0
P6.3	tcpwm[0].line_compl[1]:1	tcpwm[1].line_compl[9]:0				scb[3].uart_cts:0		scb[3].spi_select0:0									scb[8].spi_select0:0

(table continues...)

Table 9 (continued) Multiple alternate functions

Port/Pin	ACT #0	ACT #1	DS #2	ACT #4	ACT #5	ACT #6	ACT #7	ACT #8	ACT #9	ACT #10	ACT #12	ACT #13	ACT #14	ACT #15	DS #4	DS #5	DS #6
P6.4	tcpwm[0].line[2]:1	tcpwm[1].line[10]:0	scb[8].i2c_scl:1			scb[6].uart_rx:2	scb[6].i2c_scl:2	scb[6].spi_mosi:2			peri.tr_io_input[12]:0	peri.tr_io_output[0]:1				cpuss.swj_swo_tdo	scb[8].spi_mosi:1
P6.5	tcpwm[0].line_compl[2]:1	tcpwm[1].line_compl[10]:0	scb[8].i2c_sda:1			scb[6].uart_tx:2	scb[6].i2c_sda:2	scb[6].spi_miso:2			peri.tr_io_input[13]:0	peri.tr_io_output[1]:1				cpuss.swj_swdoe_tdi	scb[8].spi_miso:1
P6.6	tcpwm[0].line[3]:1	tcpwm[1].line[11]:0				scb[6].uart_rts:2		scb[6].spi_clk:2								cpuss.swj_swdio_tms	scb[8].spi_clk:1
P6.7	tcpwm[0].line_compl[3]:1	tcpwm[1].line_compl[11]:0				scb[6].uart_cts:2		scb[6].spi_select0:2								cpuss.swj_swclk_tclk	scb[8].spi_select0:1
P7.0	tcpwm[0].line[4]:1	tcpwm[1].line[12]:0				scb[4].uart_rx:1	scb[4].i2c_scl:1	scb[4].spi_mosi:1			peri.tr_io_input[14]:0		cpuss.trace_clock				
P7.1	tcpwm[0].line_compl[4]:1	tcpwm[1].line_compl[12]:0				scb[4].uart_tx:1	scb[4].i2c_sda:1	scb[4].spi_miso:1			peri.tr_io_input[15]:0						

(table continues...)

Table 9 (continued) Multiple alternate functions

Port/Pin	ACT #0	ACT #1	DS #2	ACT #4	ACT #5	ACT #6	ACT #7	ACT #8	ACT #9	ACT #10	ACT #12	ACT #13	ACT #14	ACT #15	DS #4	DS #5	DS #6
P7.2	tcpwm[0].line[5]:1	tcpwm[1].line[13]:0				scb[4].uart_rts:1		scb[4].spi_clk:1									
P7.3	tcpwm[0].line_compl[5]:1	tcpwm[1].line_compl[13]:0				scb[4].uart_cts:1		scb[4].spi_select0:1									
P7.4	tcpwm[0].line[6]:1	tcpwm[1].line[14]:0						scb[4].spi_select1:1					bless.ext_lna_rx_ctl_out	cpuss.trace_data[3]:2			
P7.5	tcpwm[0].line_compl[6]:1	tcpwm[1].line_compl[14]:0						scb[4].spi_select2:1					bless.ext_pa_tx_ctl_out	cpuss.trace_data[2]:2			
P7.6	tcpwm[0].line[7]:1	tcpwm[1].line[15]:0						scb[4].spi_select3:1					bless.ext_pa_lna_chip_en_out	cpuss.trace_data[1]:2			
P7.7	tcpwm[0].line_compl[7]:1	tcpwm[1].line_compl[15]:0						scb[3].spi_select1:0	cpuss.clk_fm_pump					cpuss.trace_data[0]:2			

(table continues...)

Table 9 (continued) Multiple alternate functions

Port/Pin	ACT #0	ACT #1	DS #2	ACT #4	ACT #5	ACT #6	ACT #7	ACT #8	ACT #9	ACT #10	ACT #12	ACT #13	ACT #14	ACT #15	DS #4	DS #5	DS #6
P8.0	tcpwm[0].line[0]:2	tcpwm[1].line[16]:0				scb[4].uart_rx:0	scb[4].i2c_scl:0	scb[4].spi_mosi:0			peri.tr_io_input[16]:0						
P8.1	tcpwm[0].line_compl[0]:2	tcpwm[1].line_compl[16]:0				scb[4].uart_tx:0	scb[4].i2c_sda:0	scb[4].spi_miso:0			peri.tr_io_input[17]:0						
P8.2	tcpwm[0].line[1]:2	tcpwm[1].line[17]:0				scb[4].uart_rts:0		scb[4].spi_clk:0									
P8.3	tcpwm[0].line_compl[1]:2	tcpwm[1].line_compl[17]:0				scb[4].uart_cts:0		scb[4].spi_select0:0									
P8.4	tcpwm[0].line[2]:2	tcpwm[1].line[18]:0						scb[4].spi_select1:0									
P8.5	tcpwm[0].line_compl[2]:2	tcpwm[1].line_compl[18]:0						scb[4].spi_select2:0									

(table continues...)

Table 9 (continued) Multiple alternate functions

Port/Pin	ACT #0	ACT #1	DS #2	ACT #4	ACT #5	ACT #6	ACT #7	ACT #8	ACT #9	ACT #10	ACT #12	ACT #13	ACT #14	ACT #15	DS #4	DS #5	DS #6
P8.6	tcpwm[0].line[3]:2	tcpwm[1].line[19]:0						scb[4].spi_select3:0									
P8.7	tcpwm[0].line_compl[3]:2	tcpwm[1].line_compl[19]:0						scb[3].spi_select2:0									
P9.0	tcpwm[0].line[4]:2	tcpwm[1].line[20]:0				scb[2].uart_rx:0	scb[2].i2c_scl:0	scb[2].spi_mosi:0			peri.tr_io_input[18]:0			cpuss.trace_data[3]:0			
P9.1	tcpwm[0].line_compl[4]:2	tcpwm[1].line_compl[20]:0				scb[2].uart_tx:0	scb[2].i2c_sda:0	scb[2].spi_miso:0			peri.tr_io_input[19]:0			cpuss.trace_data[2]:0			
P9.2	tcpwm[0].line[5]:2	tcpwm[1].line[21]:0				scb[2].uart_rts:0		scb[2].spi_clk:0		pass.dsi_ctb_cmp0:1				cpuss.trace_data[1]:0			
P9.3	tcpwm[0].line_compl[5]:2	tcpwm[1].line_compl[21]:0				scb[2].uart_cts:0		scb[2].spi_select0:0		pass.dsi_ctb_cmp1:1				cpuss.trace_data[0]:0			

(table continues...)

Table 9 (continued) Multiple alternate functions

Port/Pin	ACT #0	ACT #1	DS #2	ACT #4	ACT #5	ACT #6	ACT #7	ACT #8	ACT #9	ACT #10	ACT #12	ACT #13	ACT #14	ACT #15	DS #4	DS #5	DS #6
P9.4	tcpwm[0].line[7]:5	tcpwm[1].line[0]:2						scb[2].spi_select1:0									
P9.5	tcpwm[0].line_compl[7]:5	tcpwm[1].line_compl[0]:2						scb[2].spi_select2:0									
P9.6	tcpwm[0].line[0]:6	tcpwm[1].line[1]:2						scb[2].spi_select3:0									
P9.7	tcpwm[0].line_compl[0]:6	tcpwm[1].line_compl[1]:2															
P10.0	tcpwm[0].line[6]:2	tcpwm[1].line[22]:0				scb[1].uart_rx:1	scb[1].i2c_scl:1	scb[1].spi_mosi:1			peri.tr_io_input[20]:0			cpuss.trace_data[3]:1			
P10.1	tcpwm[0].line_compl[6]:2	tcpwm[1].line_compl[22]:0				scb[1].uart_tx:1	scb[1].i2c_sda:1	scb[1].spi_miso:1			peri.tr_io_input[21]:0			cpuss.trace_data[2]:1			

(table continues...)

Table 9 (continued) Multiple alternate functions

Port/Pin	ACT #0	ACT #1	DS #2	ACT #4	ACT #5	ACT #6	ACT #7	ACT #8	ACT #9	ACT #10	ACT #12	ACT #13	ACT #14	ACT #15	DS #4	DS #5	DS #6
P10.2	tcpwm[0].line[7]:2	tcpwm[1].line[23]:0				scb[1].uart_rts:1		scb[1].spi_clk:1						cpuss.trace_data[1]:1			
P10.3	tcpwm[0].line_compl[7]:2	tcpwm[1].line_compl[23]:0				scb[1].uart_cts:1		scb[1].spi_select0:1						cpuss.trace_data[0]:1			
P10.4	tcpwm[0].line[0]:3	tcpwm[1].line[0]:1						scb[1].spi_select1:1	audioss.pdm_clk								
P10.5	tcpwm[0].line_compl[0]:3	tcpwm[1].line_compl[0]:1						scb[1].spi_select2:1	audioss.pdm_data								
P10.6	tcpwm[0].line[1]:6	tcpwm[1].line[2]:2						scb[1].spi_select3:1									
P10.7	tcpwm[0].line_compl[1]:6	tcpwm[1].line_compl[2]:2															

(table continues...)

Table 9 (continued) Multiple alternate functions

Port/Pin	ACT #0	ACT #1	DS #2	ACT #4	ACT #5	ACT #6	ACT #7	ACT #8	ACT #9	ACT #10	ACT #12	ACT #13	ACT #14	ACT #15	DS #4	DS #5	DS #6
P11.0	tcpwm[0].line[1]:3	tcpwm[1].line[1]:1			smif.spi_select2	scb[5].uart_rx:1	scb[5].i2c_scl:1	scb[5].spi_mosi:1			peri.tr_io_input[22]:0						
P11.1	tcpwm[0].line_compl[1]:3	tcpwm[1].line_compl[1]:1			smif.spi_select1	scb[5].uart_tx:1	scb[5].i2c_sda:1	scb[5].spi_miso:1			peri.tr_io_input[23]:0						
P11.2	tcpwm[0].line[2]:3	tcpwm[1].line[2]:1			smif.spi_select0	scb[5].uart_rts:1		scb[5].spi_clk:1									
P11.3	tcpwm[0].line_compl[2]:3	tcpwm[1].line_compl[2]:1			smif.spi_data3	scb[5].uart_cts:1		scb[5].spi_select0:1				peri.tr_io_output[0]:0					
P11.4	tcpwm[0].line[3]:3	tcpwm[1].line[3]:1			smif.spi_data2			scb[5].spi_select1:1				peri.tr_io_output[1]:0					
P11.5	tcpwm[0].line_compl[3]:3	tcpwm[1].line_compl[3]:1			smif.spi_data1			scb[5].spi_select2:1									

(table continues...)

Table 9 (continued) Multiple alternate functions

Port/Pin	ACT #0	ACT #1	DS #2	ACT #4	ACT #5	ACT #6	ACT #7	ACT #8	ACT #9	ACT #10	ACT #12	ACT #13	ACT #14	ACT #15	DS #4	DS #5	DS #6
P11.6					smif.spi_data0			scb[5].spi_select3:1									
P11.7					smif.spi_clk												
P12.0	tcpwm[0].line[4]:3	tcpwm[1].line[4]:1			smif.spi_data4	scb[6].uart_rx:0	scb[6].i2c_scl:0	scb[6].spi_mosi:0			peri.tr_io_input[24]:0						
P12.1	tcpwm[0].line_compl[4]:3	tcpwm[1].line_compl[4]:1			smif.spi_data5	scb[6].uart_tx:0	scb[6].i2c_sda:0	scb[6].spi_miso:0			peri.tr_io_input[25]:0						
P12.2	tcpwm[0].line[5]:3	tcpwm[1].line[5]:1			smif.spi_data6	scb[6].uart_rts:0		scb[6].spi_clk:0									
P12.3	tcpwm[0].line_compl[5]:3	tcpwm[1].line_compl[5]:1			smif.spi_data7	scb[6].uart_cts:0		scb[6].spi_select0:0									
P12.4	tcpwm[0].line[6]:3	tcpwm[1].line[6]:1			smif.spi_select3			scb[6].spi_select1:0	audiess.pdm_clk								

(table continues...)

Table 9 (continued) Multiple alternate functions

Port/Pin	ACT #0	ACT #1	DS #2	ACT #4	ACT #5	ACT #6	ACT #7	ACT #8	ACT #9	ACT #10	ACT #12	ACT #13	ACT #14	ACT #15	DS #4	DS #5	DS #6
P12.5	tcpwm[0].line_compl[6]:3	tcpwm[1].line_compl[6]:1						scb[6].spi_select2:0	audioss.pdm_data								
P12.6	tcpwm[0].line[7]:3	tcpwm[1].line[7]:1						scb[6].spi_select3:0									
P12.7	tcpwm[0].line_compl[7]:3	tcpwm[1].line_compl[7]:1															
P13.0	tcpwm[0].line[0]:4	tcpwm[1].line[8]:1				scb[6].uart_rx:1	scb[6].i2c_scl:1	scb[6].spi_mosi:1			peri.tr_io_input[26]:0						
P13.1	tcpwm[0].line_compl[0]:4	tcpwm[1].line_compl[8]:1				scb[6].uart_tx:1	scb[6].i2c_sda:1	scb[6].spi_miso:1			peri.tr_io_input[27]:0						
P13.2	tcpwm[0].line[1]:4	tcpwm[1].line[9]:1				scb[6].uart_rts:1		scb[6].spi_clk:1									

(table continues...)

Table 9 (continued) Multiple alternate functions

Port/Pin	ACT #0	ACT #1	DS #2	ACT #4	ACT #5	ACT #6	ACT #7	ACT #8	ACT #9	ACT #10	ACT #12	ACT #13	ACT #14	ACT #15	DS #4	DS #5	DS #6
P13.3	tcpwm[0].line_compl[1]:4	tcpwm[1].line_compl[9]:1				scb[6].uart_cts:1		scb[6].spi_select0:1									
P13.4	tcpwm[0].line[2]:4	tcpwm[1].line[10]:1						scb[6].spi_select1:1									
P13.5	tcpwm[0].line_compl[2]:4	tcpwm[1].line_compl[10]:1						scb[6].spi_select2:1									
P13.6	tcpwm[0].line[3]:4	tcpwm[1].line[11]:1						scb[6].spi_select3:1									
P13.7	tcpwm[0].line_compl[3]:4	tcpwm[1].line_compl[11]:1															

***Note**:* *The notation for a signal is of the form IPName[x].signal_name[u]:y. IPName = Name of the block (such as tcpwm), x = Unique instance of the IP, Signal_name = Name of the signal, u = Signal number where there are more than one signals for a particular signal name, y = Designates copies of the signal name. For example, the name tcpwm[0].line_compl[3]:4 indicates that this is instance 0 of a tcpwm block, the signal is line_compl # 3 (complement of the line output) and this is the fourth occurrence (copy) of the signal. Signal copies are provided to allow flexibility in routing and to maximise utilisation of on-chip resources.*

Analog, Smart I/O, and DSI alternate Port Pin functionality is provided in Table 10.

Table 10 Port Pin Analog, Smart I/O, and DSI Functions

Port/Pin	Name	Analog	Digital HV	DSI	SMARTIO
P0.0	P0.0	wco_in		dsi[0].port_if[0]	
P0.1	P0.1	wco_out		dsi[0].port_if[1]	
P0.2	P0.2			dsi[0].port_if[2]	
P0.3	P0.3			dsi[0].port_if[3]	
P0.4	P0.4		pmic_wakeup_inhibernate_wakeup[1]	dsi[0].port_if[4]	
P0.5	P0.5		pmic_wakeup_out	dsi[0].port_if[5]	
P1.0	P1.0			dsi[1].port_if[0]	
P1.1	P1.1			dsi[1].port_if[1]	
P1.2	P1.2			dsi[1].port_if[2]	
P1.3	P1.3			dsi[1].port_if[3]	
P1.4	P1.4		hibernate_wakeup[0]	dsi[1].port_if[4]	
P1.5	P1.5			dsi[1].port_if[5]	
P5.0	P5.0			dsi[3].port_if[0]	
P5.1	P5.1			dsi[3].port_if[1]	
P5.2	P5.2			dsi[3].port_if[2]	
P5.3	P5.3			dsi[3].port_if[3]	
P5.4	P5.4			dsi[3].port_if[4]	
P5.5	P5.5			dsi[3].port_if[5]	
P5.6	P5.6	lpcomp.inp_comp0		dsi[3].port_if[6]	
P5.7	P5.7	lpcomp.inn_comp0		dsi[3].port_if[7]	
P6.0	P6.0			dsi[4].port_if[0]	
P6.1	P6.1			dsi[4].port_if[1]	

(table continues...)

Table 10 (continued) Port Pin Analog, Smart I/O, and DSI Functions

Port/Pin	Name	Analog	Digital HV	DSI	SMARTIO
P6.2	P6.2	lpcomp.inp_comp1		dsi[4].port_if[2]	
P6.3	P6.3	lpcomp.inn_comp1		dsi[4].port_if[3]	
P6.4	P6.4			dsi[4].port_if[4]	
P6.5	P6.5			dsi[4].port_if[5]	
P6.6	P6.6		swd_data	dsi[4].port_if[6]	
P6.7	P6.7		swd_clk	dsi[4].port_if[7]	
P7.0	P7.0			dsi[5].port_if[0]	
P7.1	P7.1	csd.cmodpaddcsd.cmodpads		dsi[5].port_if[1]	
P7.2	P7.2	csd.csh_tankpaddcsd.csh_tankpads		dsi[5].port_if[2]	
P7.3	P7.3	csd.vref_ext		dsi[5].port_if[3]	
P7.4	P7.4			dsi[5].port_if[4]	
P7.5	P7.5			dsi[5].port_if[5]	
P7.6	P7.6			dsi[5].port_if[6]	
P7.7	P7.7	csd.cshieldpads		dsi[5].port_if[7]	
P8.0	P8.0			dsi[11].port_if[0]	smartio[8].io[0]
P8.1	P8.1			dsi[11].port_if[1]	smartio[8].io[1]
P8.2	P8.2			dsi[11].port_if[2]	smartio[8].io[2]
P8.3	P8.3			dsi[11].port_if[3]	smartio[8].io[3]
P8.4	P8.4			dsi[11].port_if[4]	smartio[8].io[4]
P8.5	P8.5			dsi[11].port_if[5]	smartio[8].io[5]
P8.6	P8.6			dsi[11].port_if[6]	smartio[8].io[6]
P8.7	P8.7			dsi[11].port_if[7]	smartio[8].io[7]
P9.0	P9.0	ctb_oa0+		dsi[10].port_if[0]	smartio[9].io[0]
P9.1	P9.1	ctb_oa0-		dsi[10].port_if[1]	smartio[9].io[1]
P9.2	P9.2	ctb_oa0_out		dsi[10].port_if[2]	smartio[9].io[2]
P9.3	P9.3	ctb_oa1_out		dsi[10].port_if[3]	smartio[9].io[3]
P9.4	P9.4	ctb_oa1-		dsi[10].port_if[4]	smartio[9].io[4]
P9.5	P9.5	ctb_oa1+		dsi[10].port_if[5]	smartio[9].io[5]
P9.6	P9.6	ctb_oa0+ or ctdac_out		dsi[10].port_if[6]	smartio[9].io[6]

(table continues...)

Table 10 (continued) Port Pin Analog, Smart I/O, and DSI Functions

Port/Pin	Name	Analog	Digital HV	DSI	SMARTIO
P9.7	P9.7	ctb_oa1+ or ext_vref		dsi[10].port_if[7]	smartio[9].io[7]
P10.0	P10.0	sarmux[0]		dsi[9].port_if[0]	
P10.1	P10.1	sarmux[1]		dsi[9].port_if[1]	
P10.2	P10.2	sarmux[2]		dsi[9].port_if[2]	
P10.3	P10.3	sarmux[3]		dsi[9].port_if[3]	
P10.4	P10.4	sarmux[4]		dsi[9].port_if[4]	
P10.5	P10.5	sarmux[5]		dsi[9].port_if[5]	
P10.6	P10.6	sarmux[6]		dsi[9].port_if[6]	
P10.7	P10.7	sarmux[7]		dsi[9].port_if[7]	
P11.0	P11.0			dsi[8].port_if[0]	
P11.1	P11.1			dsi[8].port_if[1]	
P11.2	P11.2			dsi[8].port_if[2]	
P11.3	P11.3			dsi[8].port_if[3]	
P11.4	P11.4			dsi[8].port_if[4]	
P11.5	P11.5			dsi[8].port_if[5]	
P11.6	P11.6			dsi[8].port_if[6]	
P11.7	P11.7			dsi[8].port_if[7]	
P12.0	P12.0			dsi[7].port_if[0]	
P12.1	P12.1			dsi[7].port_if[1]	
P12.2	P12.2			dsi[7].port_if[2]	
P12.3	P12.3			dsi[7].port_if[3]	
P12.4	P12.4			dsi[7].port_if[4]	
P12.5	P12.5			dsi[7].port_if[5]	
P12.6	P12.6	srss.eco_in		dsi[7].port_if[6]	
P12.7	P12.7	srss.eco_out		dsi[7].port_if[7]	
P13.0	P13.0			dsi[6].port_if[0]	
P13.1	P13.1			dsi[6].port_if[1]	
P13.2	P13.2			dsi[6].port_if[2]	
P13.3	P13.3			dsi[6].port_if[3]	
P13.4	P13.4			dsi[6].port_if[4]	
P13.5	P13.5			dsi[6].port_if[5]	
P13.6	P13.6			dsi[6].port_if[6]	
P13.7	P13.7			dsi[6].port_if[7]	

5 Power supply considerations

The following power system diagrams show typical connections for power pins for all supported packages.

In these diagrams, the package pin is shown with the pin name, for example "VDDA, M13". For VDDx pins, the I/O port that is powered by that pin is also shown, for example "VDDD, A13; I/O port P1".

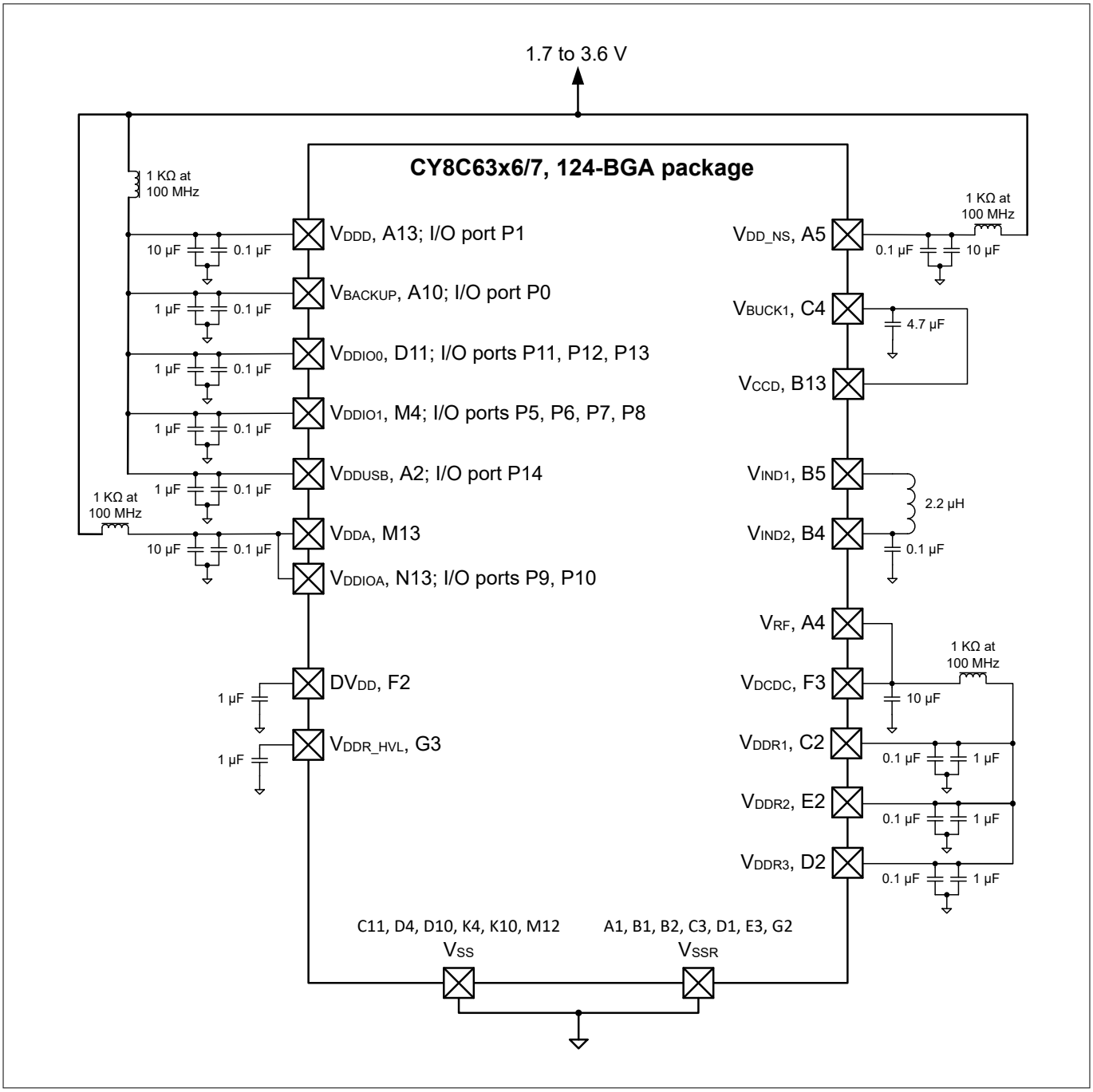

Figure 12 **124-BGA power connection diagram**

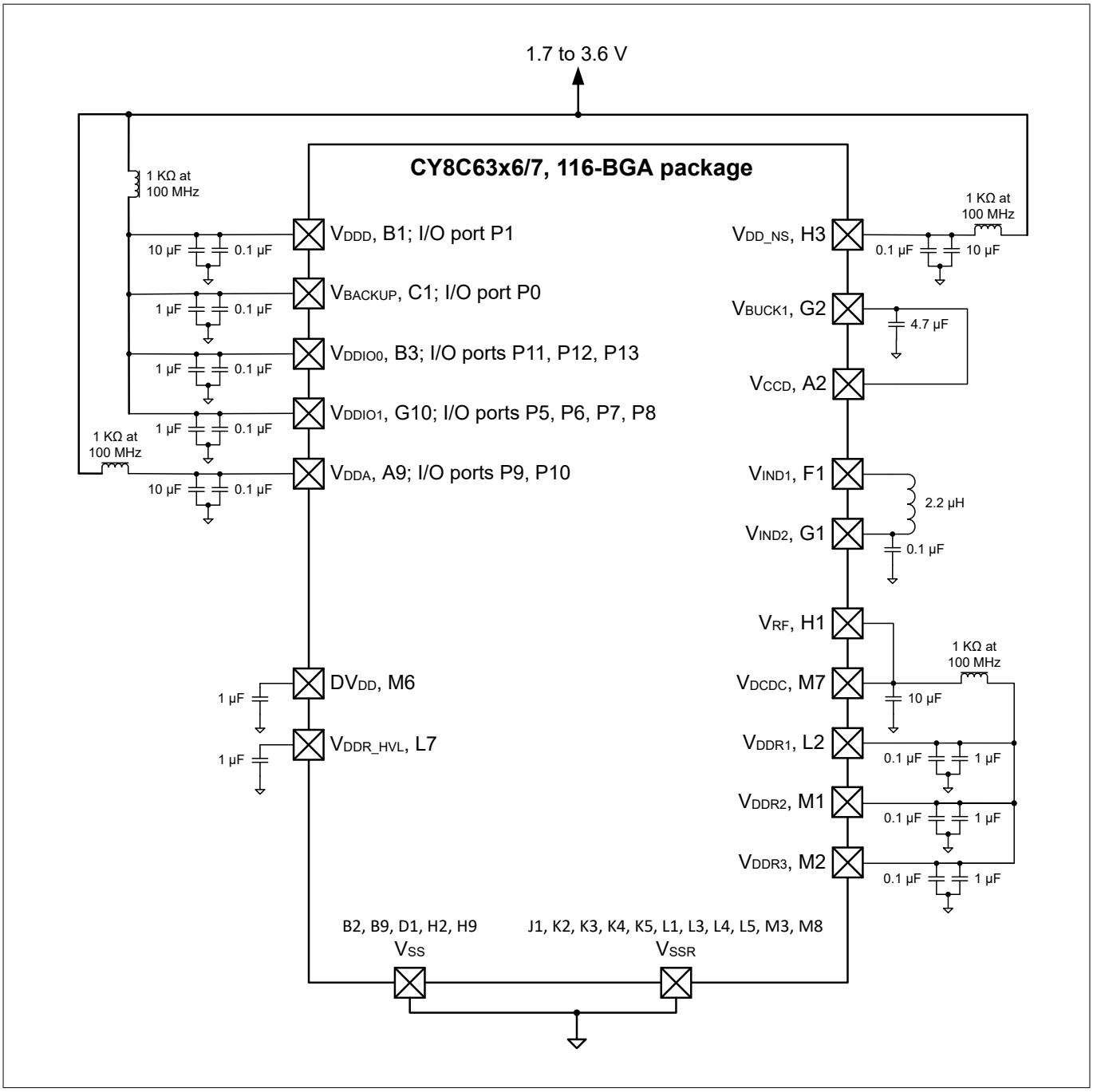

Figure 13 **116-BGA power connection diagram**

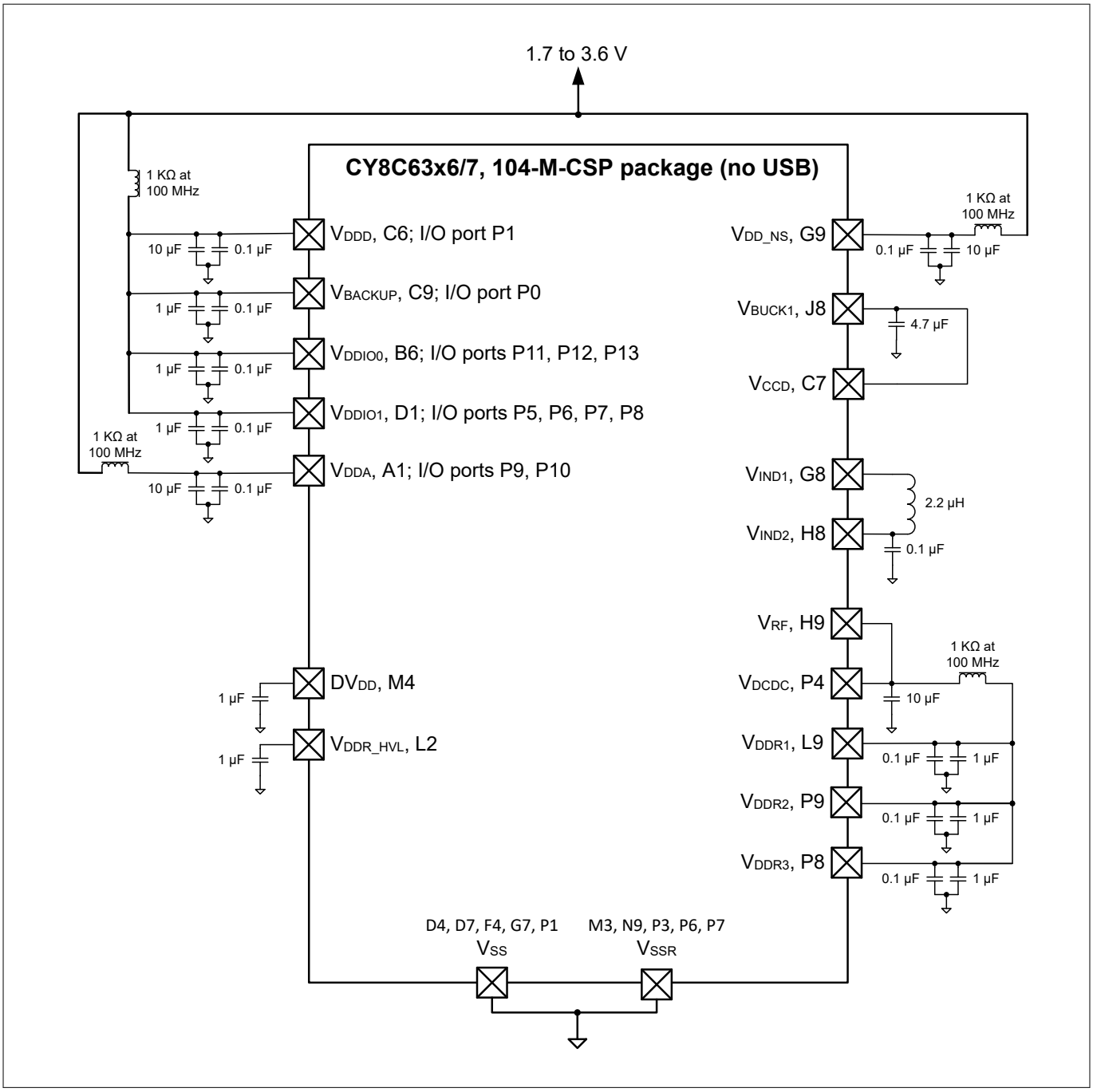

Figure 14 **104-M-CSP power connection diagram**

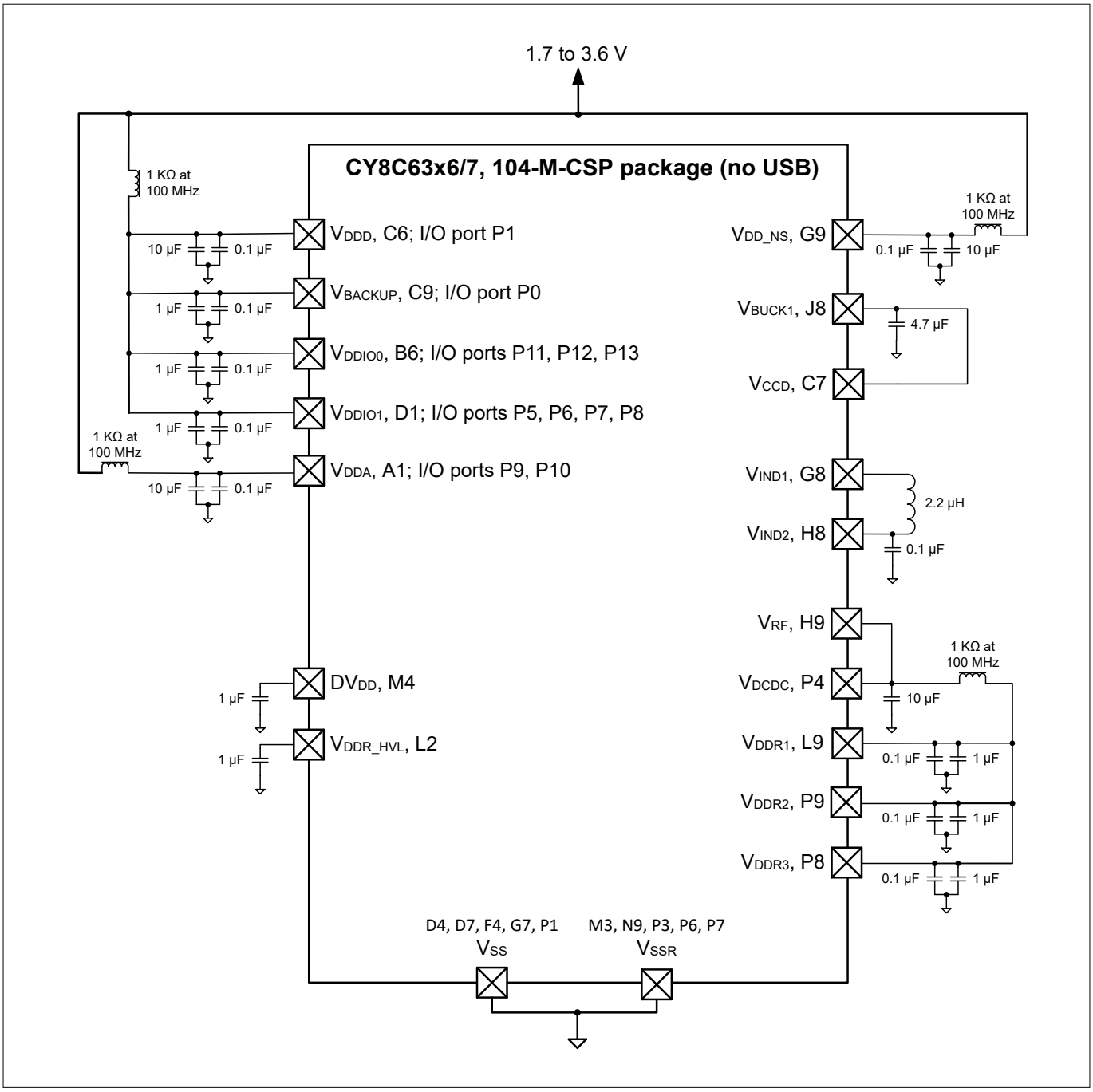

Figure 15 **104-M-CSP-USB power connection diagram**

In the QFN package, all internal grounds are routed to the metal pad (epad) in the package. This pad must be grounded on the PCB. In addition, the two antenna ground pins (GANT1 and GANT2) on the 68-QFN package should also be connected to the epad ground on the PCB with as short a connection as possible.

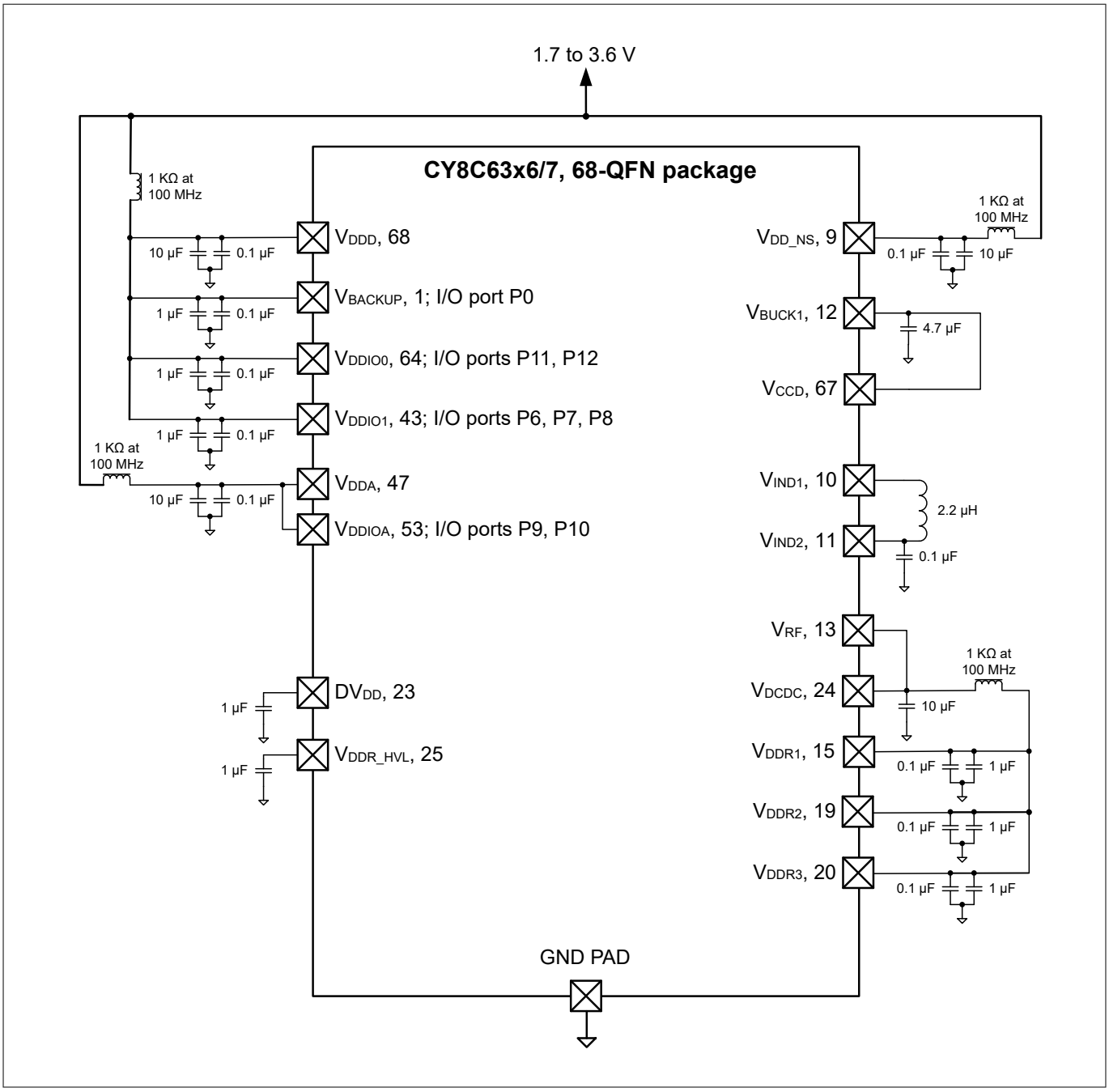

Figure 16 **68-QFN power connection diagram**

There are as many as eight V_{DDx} supply pins, depending on the package, and multiple V_{SS} ground pins. The power pins are:

- V_{DDD}: the main digital supply. It powers the low dropout (LDO) regulators and I/O port 1.[3)]
- V_{CCD}: the main LDO output. It requires a 4.7-µF capacitor for regulation. The LDO can be turned off when V_{CCD} is driven from the switching regulator (see V_{BUCK1} below). For more information, see the power system block diagram in the device technical reference manual (TRM).
- V_{DDA}: the supply for the analog peripherals. Voltage must be applied to this pin for correct device initialization and boot up.
- V_{DDIOA}: the supply for I/O ports 9 and 10. If it is present in the device package, it must be connected to V_{DDA}.

3 Port 1 is not available in the 68-QFN package.

- V_{DDIO0}: the supply for I/O ports 11, 12, and 13.
- V_{DDIO1}: the supply for I/O ports 5, 6, 7, and 8.
- V_{BACKUP}: the supply for the backup domain, which includes the 32-kHz WCO and the RTC. It can be a separate supply as low as 1.4 V, for battery or supercapacitor backup, as Figure 17 shows. Otherwise it is connected to V_{DDD}. It powers I/O port 0.

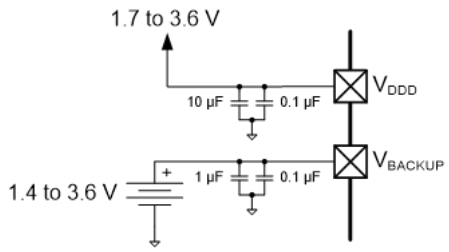

Figure 17 Separate Battery Connection to V_{BACKUP}

- V_{DDUSB}: the supply for the USB peripheral and the USBDP and USBDM pins. It must be 2.85 V to 3.6 V for USB operation. If USB is not used, it can be 1.7 V to 3.6 V, and the USB pins can be used as limited-capability GPIOs on I/O port 14.

Table 11 shows a summary of the I/O port supplies:

Table 11 I/O Port Supplies

Port	Supply	Alternate Supply
0	V_{BACKUP}	V_{DDD}
1	V_{DDD}	-
5, 6, 7, 8	V_{DDIO1}	-
9, 10	V_{DDIOA}	V_{DDA}
11, 12, 13	V_{DDIO0}	-
14	V_{DDUSB}	-

***Note**: If the USB pins are not used, connect V_{DDUSB} to ground and leave the P14.0/USBDP and P14.1/USBDM pins unconnected.*

Voltage must be applied to the V_{DDD} pin, and the V_{DDA} pin as noted above, for correct device initialization and operation. If an I/O port is not being used, applying voltage to the corresponding V_{DDx} pin is optional.

- V_{SS} and V_{SSR}: ground pins for the above supplies. All ground pins should be connected together to a common ground.

In addition to the LDO regulator, a single input multiple output (SIMO) switching regulator is included. It provides two regulated outputs using a single inductor. The regulator pins are:

- V_{DD_NS}: the regulator supply.
- V_{IND1} and V_{IND2}: the inductor and capacitor connections.
- V_{BUCK1}: the first regulator output. It is typically used to drive V_{CCD}, see above
- V_{RF}: the second regulator output. It is typically used to drive the Bluetooth® LE radio power pins: V_{DCDC} and V_{DDRx}.

A set of power pins for the Bluetooth® LE radio are included. They are:

- V_{DCDC}: the radio digital supply.
- V_{DDR1}, V_{DDR2}, and V_{DDR3}: the radio analog supplies.

- D_{VDD}: the radio digital LDO output. It requires a 1-µF capacitor for regulation.
- V_{DDR_HVL}: the radio analog LDO output. It requires a 1-µF capacitor for regulation.

The various V_{DD} power pins are not connected together on chip. They can be connected off chip, in one or more separate nets. If separate power nets are used, they can be isolated from noise from the other nets using optional ferrite beads, as indicated in the diagrams.

No external load should be placed on V_{CCD}, V_{RF}, or any of the switching regulator power pins; whether or not the switching regulator is used.

There are no power pin sequencing requirements; power supplies may be brought up in any order. The power management system holds the device in reset until all power pins are at the voltage levels required for proper operation.

Note: *If a battery is installed on the PCB first, V_{DDD} must be cycled for at least 50 µs. This prevents premature drain of the battery during product manufacture and storage.*

Bypass capacitors must be connected to a common ground from the V_{DDx} and other pins, as indicated in the diagrams. Typical practice for systems in this frequency range is to use a 10-µF or 1-µF capacitor in parallel with a smaller capacitor (0.1 µF, for example). Note that these are simply rules of thumb and that, for critical applications, the PCB layout, lead inductance, and the bypass capacitor parasitic should be simulated for optimal bypassing.

All capacitors and inductors should be ±20% or better. The capacitor connected to V_{IND2} should be 100 nF. The recommended inductor value is 2.2 µH ±20% (for example, TDK MLP2012H2R2MT0S1).

It is good practice to check the datasheets for your bypass capacitors, specifically the working voltage and the DC bias specifications. With some capacitors, the actual capacitance can decrease considerably when the applied voltage is a significant percentage of the rated working voltage.

For more information on pad layout, refer to PSOC™ 6 CAD libraries.

6 Electrical specifications

All specifications are valid for –40°C ≤ T_A ≤ 85°C and for 1.71 V to 3.6 V except where noted.

6.1 Absolute maximum ratings

Table 12 Absolute maximum ratings[1)]

Spec ID#	Parameter	Description	Min	Typ	Max	Unit	Details/ Conditions
SID1	V_{DD_ABS}	Analog or digital supply relative to V_{SS} ($V_{SSD} = V_{SSA}$)	–0.5	–	4	V	
SID2	V_{CCD_ABS}	Direct digital core voltage input relative to V_{SSD}	–0.5	–	1.2	V	
SID3	V_{GPIO_ABS}	GPIO voltage; V_{DDD} or V_{DDA}	–0.5	–	V_{DD}+ 0.5	V	
SID4	I_{GPIO_ABS}	Current per GPIO	–25	–	25	mA	
SID5	$I_{GPIO_injection}$	GPIO injection current per pin	–0.5	–	0.5	mA	
SID3A	ESD_HBM	Electrostatic discharge Human Body Model	2200	–	–	V	
SID3B	ESD_HBM_ANT	Electrostatic discharge Human Body Model; Antenna Pin	500	–	–	V	RF pin
SID4A	ESD_CDM	Electrostatic discharge Charged Device Model	500	–	–	V	
SID4B	ESD_CDM_ANT	Electrostatic discharge Charged Device Model; Antenna Pin	200	–	–	V	RF pin
SID4C	ESD_CDM_X	Electrostatic discharge Charged Device Model; XI, XO pins	200	–	–	V	XI, XO Pins
SID5A	LU	Pin current for latchup-free operation	–100	–	100	mA	

1) Usage above the absolute maximum conditions listed in Table 11 may cause permanent damage to the device. Exposure to absolute maximum conditions for extended periods of time may affect device reliability. The maximum storage temperature is 150 °C in compliance with JEDEC Standard JESD22-A103, High Temperature Storage Life. When used below absolute maximum conditions but above normal operating conditions, the device may not operate to specification.

6.2 Device-level specifications

Table 15 provides detailed specifications of CPU current. Table 13 summarizes these specifications, for rapid review of CPU currents under common conditions. Note that the max frequency for CM4 is 150 MHz, and for CM0+ is 100 MHz. IMO and FLL are used to generate the CPU clocks; FLL is not used when the CPU clock frequency is 8 MHz.

Table 13 CPU current specifications summary

Condition	Range	Typ Range	Max Range
LP Mode, V_{DDD} = 3.3 V, V_{CCD} = 1.1 V, with buck regulator			
CM4 active, CM0+ sleep	Across CPUs clock ranges: 8–150/100 MHz; Dhrystone with flash cache enabled	0.9–6.9 mA	1.5–8.6 mA
CM0+ active, CM4 sleep		0.8–3.8 mA	1.3–4.5 mA
CM4 sleep, CM0+ sleep		0.7–1.5 mA	1.3–2.2 mA
CM0+ sleep, CM4 off		0.7–1.3 mA	1.3–2 mA
Minimum regulator current mode	Across CM4/CM0+ CPU active/sleep modes	0.6–0.7 mA	1.1–1.1 mA
ULP Mode, V_{DDD} = 3.3 V, V_{CCD} = 0.9 V, with buck regulator			
CM4 active, CM0+ sleep	Across CPUs clock ranges: 8 – 50/25 MHz; Dhrystone with flash cache enabled	0.65–1.6 mA	0.8–2.2mA
CM0+ active, CM4 sleep		0.51–0.91 mA	0.72–1.25 mA
CM4 sleep, CM0+ sleep		0.42–0.76 mA	0.65–1.1 mA
CM0+ sleep, CM4 off		0.41–0.62 mA	0.6–0.9 mA
Minimum regulator current mode	Across CM4/CM0+ CPU active/sleep modes	0.39–0.54 mA	0.6–0.76 mA
Deep Sleep	Across SRAM retention	7–9 µA	-
Hibernate	Across V_{DDD}	300–800 nA	-

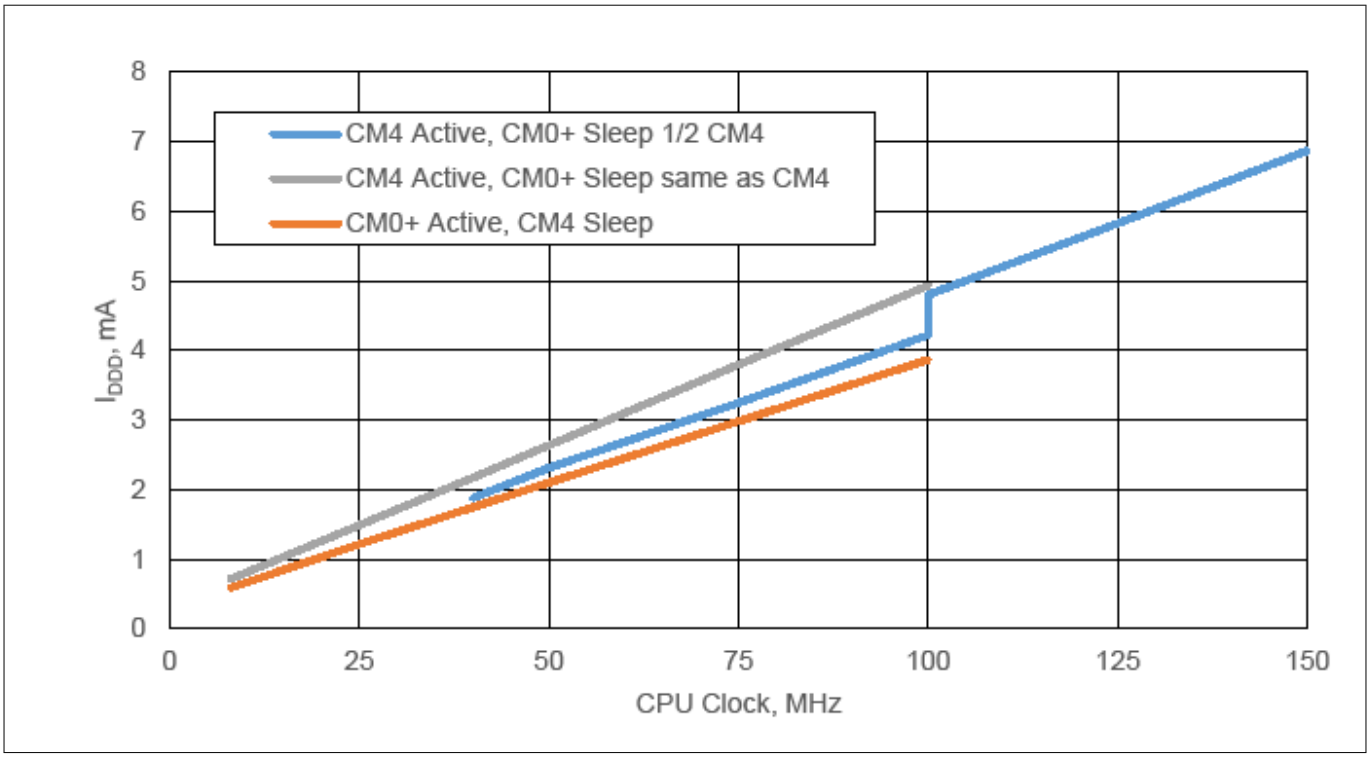

Figure 18 **Typical Device Currents vs. CPU Frequency; System Low Power (LP) Mode**[4)]

6.2.1 Power supplies

Table 14 **Power supply DC specifications**

Spec ID#	Parameter	Description	Min	Typ	Max	Unit	Details/ Conditions
SID6	V_{DDD}	Internal regulator and Port 1 GPIO supply	1.7	–	3.6	V	–
SID7	V_{DDA}	Analog power supply voltage. Shorted to V_{DDIOA} on PCB.	1.7	–	3.6	V	Internally unregulated supply
SID7A	V_{DDIO1}	GPIO supply for ports 5 to 8 when present	1.7	–	3.6	V	Must be ≥ V_{DDA} if the CAPSENSE™ (CSD) block is used in the application
SID7B	V_{DDIO0}	GPIO supply for ports 11 to 13 when present	1.7	–	3.6	V	–
SID7E	V_{DDIO0}	Supply for eFuse programming	2.38	2.5	2.62	V	

(table continues...)

4 CM4 Active, CM0+ Sleep 1/2 CM4 trace values are higher because above 100 MHz, the PLL must be used instead of the FLL.

Table 14 (continued) Power supply DC specifications

Spec ID#	Parameter	Description	Min	Typ	Max	Unit	Details/ Conditions
SID7C	V_{DDIO2}	GPIO supply for ports 2 to 4 when present	1.7	–	3.6	V	–
SID7D	V_{DDIOA}	GPIO supply for ports 9 and 10 when present. Must be connected to V_{DDA} on PCB.	1.7	–	3.6	V	–
SID7F	V_{DDUSB}	Supply for port 14 (USB or GPIO) when present	1.7	–	3.6	V	Min. supply is 2.85 V for USB
SID6B	V_{BACKUP}	Backup power and GPIO Port 0 supply when present	1.7	–	3.6	V	Min. is 1.4 V when V_{DDD} is removed.
SID8	V_{CCD1}	Output voltage (for core logic bypass)	–	1.1	–	V	System LP mode
SID9	V_{CCD2}	Output voltage (for core logic bypass)	–	0.9	–	V	ULP mode. Valid for –20 to 85°C.
SID10	C_{EFC}	External regulator voltage (V_{CCD}) bypass	3.8	4.7	5.6	µF	X5R ceramic or better; Value for 0.8 to 1.2 V.
SID11	C_{EXC}	Power supply decoupling capacitor	–	10	–	µF	X5R ceramic or better

6.2.2 CPU current and transition times

Table 15 CPU current and transition times

Spec ID#	Parameter	Description	Min	Typ	Max	Unit	Details/ Conditions
LP RANGE POWER SPECIFICATIONS (for VCCD = 1.1 V with Buck and LDO)							
Cortex® M4. Active Mode							
Execute with Cache Disabled (Flash)							

(table continues...)

Table 15 (continued) CPU current and transition times

Spec ID#	Parameter	Description	Min	Typ	Max	Unit	Details/ Conditions
SIDF1	I_{DD1}	Execute from Flash; CM4 Active 50 MHz, CM0+ Sleep 25 MHz. With IMO & FLL. While(1).	–	2.3	3.2	mA	V_{DDD}= 3.3 V, Buck ON, Max at 60 °C
			–	3.1	3.6	mA	V_{DDD}= 1.8 V, Buck ON, Max at 60 °C
			–	5.7	6.5	mA	V_{DDD}= 1.8 to 3.3 V, LDO, Max at 85 °C
SIDF2	I_{DD2}	Execute from Flash; CM4 Active 8 MHz, CM0+ Sleep 8 MHz. With IMO. While(1).	–	0.9	1.5	mA	V_{DDD}= 3.3 V, Buck ON, Max at 60°C
			–	1.2	1.6	mA	V_{DDD}= 1.8 V, Buck ON, Max at 60°C
			–	2.8	3.5	mA	V_{DDD}= 1.8 to 3.3 V, LDO, Max at 85 °C
Execute with Cache Enabled							
SIDC1	I_{DD3}	Execute from Cache; CM4 Active 150 MHz, CM0+ Sleep 75 MHz. IMO & PLL. Dhrystone.	–	6.9	8.6	mA	V_{DDD}= 3.3 V, Buck ON, Max at 60 °C
			–	10.9	13.7	mA	V_{DDD}= 1.8 V, Buck ON, Max at 60 °C
			–	13.7	15.5	mA	V_{DDD} = 1.8 to 3.3 V, LDO, Max at 85 °C
SIDC2	I_{DD4}	Execute from Cache; CM4 Active 100 MHz, CM0+ Sleep 100 MHz. IMO & FLL. Dhrystone.	–	4.8	5.8	mA	V_{DDD}= 3.3 V, Buck ON, Max at 60 °C
			–	7.4	8.4	mA	V_{DDD}= 1.8 V, Buck ON, Max at 60 °C
			–	11.3	12	mA	V_{DDD} = 1.8 to 3.3 V, LDO, Max at 85°C

(table continues...)

Table 15 (continued) CPU current and transition times

Spec ID#	Parameter	Description	Min	Typ	Max	Unit	Details/ Conditions
SIDC3	I_{DD5}	Execute from Cache; CM4 Active 50 MHz, CM0+ Sleep 25 MHz. IMO & FLL. Dhrystone	–	2.4	3.4	mA	V_{DDD}= 3.3 V, Buck ON, Max at 60 °C
			–	3.7	4.1	mA	V_{DDD}= 1.8 V, Buck ON, Max at 60 °C
			–	6.3	7.2	mA	V_{DDD} = 1.8 to 3.3 V, LDO, Max at 85 °C
SIDC4	I_{DD6}	Execute from Cache; CM4 Active 8 MHz, CM0+ Sleep 8 MHz. IMO. Dhrystone.	–	0.9	1.5	mA	V_{DDD}= 3.3 V, Buck ON, Max at 60 °C
			–	1.3	1.8	mA	V_{DDD}= 1.8 V, Buck ON, Max at 60 °C
			–	3	3.8	mA	V_{DDD} = 1.8 to 3.3 V, LDO, Max at 85 °C
Cortex® M0+. Active Mode							
Execute with Cache Disabled (Flash)							
SIDF3	I_{DD7}	Execute from Flash; CM4 Off, CM0+ Active 50 MHz. With IMO & FLL. While (1).	–	2.4	3.3	mA	V_{DDD}= 3.3 V, Buck ON, Max at 60 °C
			–	3.2	3.7	mA	V_{DDD}= 1.8 V, Buck ON, Max at 60°C
			–	5.6	6.3	mA	V_{DDD} = 1.8 to 3.3 V, LDO, Max at 85°C
SIDF4	I_{DD8}	Execute from Flash; CM4 Off, CM0+ Active 8 MHz. With IMO. While (1).	–	0.8	1.5	mA	V_{DDD}= 3.3 V, Buck ON, Max at 60°C
			–	1.1	1.6	mA	V_{DDD}= 1.8 V, Buck ON, Max at 60°C
			–	2.60	3.4	mA	V_{DDD} = 1.8 to 3.3 V, LDO, Max at 85°C
Execute with Cache Enabled							

(table continues...)

Table 15 (continued) CPU current and transition times

Spec ID#	Parameter	Description	Min	Typ	Max	Unit	Details/ Conditions
SIDC5	I_{DD9}	Execute from Cache; CM4 Off, CM0+ Active 100 MHz. With IMO & FLL. Dhrystone.	–	3.8	4.5	mA	V_{DDD}= 3.3 V, Buck ON, Max at 60°C
			–	5.9	6.5	mA	V_{DDD}= 1.8 V, Buck ON, Max at 60°C
			–	9	9.7	mA	V_{DDD} = 1.8 to 3.3 V, LDO, Max at 85°C
SIDC6	I_{DD10}	Execute from Cache; CM4 Off, CM0+ Active 8 MHz. With IMO. Dhrystone.	–	0.8	1.3	mA	V_{DDD}= 3.3 V, Buck ON, Max at 60°C
			–	1.20	1.7	mA	V_{DDD}= 1.8 V, Buck ON, Max at 60°C
			–	2.60	3.4	mA	V_{DDD} = 1.8 to 3.3 V, LDO, Max at 85°C
Cortex® M4. Sleep Mode							
SIDS1	I_{DD11}	CM4 Sleep 100 MHz; CM0+ Sleep 25 MHz. With IMO & FLL.	–	1.5	2.2	mA	V_{DDD}= 3.3 V, Buck ON, Max at 60°C
			–	2.2	2.7	mA	V_{DDD}= 1.8 V, Buck ON, Max at 60°C
			–	4	4.6	mA	V_{DDD} = 1.8 to 3.3 V, LDO, Max at 85°C
SIDS2	I_{DD12}	CM4 Sleep 50 MHz; CM0+ Sleep 25 MHz. With IMO & FLL.	–	1.2	1.9	mA	V_{DDD}= 3.3 V, Buck ON, Max at 60°C
			–	1.7	2.2	mA	V_{DDD}= 1.8 V, Buck ON, Max at 60°C
			–	3.4	4.3	mA	V_{DDD} = 1.8 to 3.3 V, LDO, Max at 85°C

(table continues...)

Table 15 (continued) CPU current and transition times

Spec ID#	Parameter	Description	Min	Typ	Max	Unit	Details/ Conditions
SIDS3	I_{DD13}	CM4 Sleep 8 MHz, CM0+ Sleep 8 MHz. With IMO.	–	0.7	1.3	mA	V_{DDD}= 3.3 V, Buck ON, Max at 60°C
			–	1	1.5	mA	V_{DDD}= 1.8 V, Buck ON, Max at 60°C
			–	2.4	3.3	mA	V_{DDD} = 1.8 to 3.3 V, LDO, Max at 85°C
Cortex® M0+. Sleep Mode							
SIDS4	I_{DD14}	CM4 Off, CM0+ Sleep 50 MHz. With IMO & FLL.	–	1.3	2	mA	V_{DDD}= 3.3 V, Buck ON, Max at 60°C
			–	1.9	2.4	mA	V_{DDD}= 1.8 V, Buck ON, Max at 60°C
			–	3.80	4.6	mA	V_{DDD} = 1.8 to 3.3 V, LDO, Max at 85°C
SIDS5	I_{DD15}	CM4 Off, CM0+ Sleep 8 MHz. With IMO.	–	0.7	1.3	mA	V_{DDD}= 3.3 V, Buck ON, Max at 60°C
			–	1	1.5	mA	V_{DDD}= 1.8 V, Buck ON, Max at 60°C
			–	2.4	3.3	mA	V_{DDD} = 1.8 to 3.3 V, LDO, Max at 85°C
Cortex® M4. Minimum Regulator Current Mode							
SIDLPA1	I_{DD16}	Execute from Flash; CM4 LPA 8 MHz, CM0+ Sleep 8 MHz. With IMO. While (1).	–	0.9	1.5	mA	V_{DDD}= 3.3 V, Buck ON, Max at 60°C
			–	1.2	1.7	mA	V_{DDD}= 1.8 V, Buck ON, Max at 60°C
			–	2.8	3.5	mA	V_{DDD} = 1.8 to 3.3 V, LDO, Max at 85°C

(table continues...)

Table 15 (continued) CPU current and transition times

Spec ID#	Parameter	Description	Min	Typ	Max	Unit	Details/ Conditions
SIDLPA2	I_{DD17}	Execute from Cache; CM4 LPA 8 MHz, CM0+ Sleep 8 MHz. With IMO. Dhrystone.	–	0.9	1.5	mA	V_{DDD}= 3.3 V, Buck ON, Max at 60°C
			–	1.3	1.8	mA	V_{DDD}= 1.8 V, Buck ON, Max at 60°C
			–	2.9	3.7	mA	V_{DDD} = 1.8 to 3.3 V, LDO, Max at 85°C
Cortex® M0+. Minimum Regulator Current Mode							
SIDLPA3	I_{DD18}	Execute from Flash; CM4 Off, CM0+ Active 8 MHz. With IMO. While (1).	–	0.8	1.4	mA	V_{DDD}= 3.3 V, Buck ON, Max at 60°C
			–	1.1	1.6	mA	V_{DDD}= 1.8 V, Buck ON, Max at 60°C
			–	2.7	3.6	mA	V_{DDD} = 1.8 to 3.3 V, LDO, Max at 85°C
SIDLPA4	I_{DD19}	Execute from Cache; CM4 Off, CM0+ Active 8 MHz. With IMO. Dhrystone.	–	0.8	1.4	mA	V_{DDD}= 3.3 V, Buck ON, Max at 60°C
			–	1.2	1.7	mA	V_{DDD}= 1.8 V, Buck ON, Max at 60°C
			–	2.7	3.6	mA	V_{DDD} = 1.8 to 3.3 V, LDO, Max at 85°C
Cortex® M4. Minimum Regulator Current Mode							
SIDLPS1	I_{DD20}	CM4 Sleep 8 MHz, CM0+ Sleep 8 MHz. With IMO.	–	0.7	1.1	mA	V_{DDD}= 3.3 V, Buck ON, Max at 60°C
			–	1	1.5	mA	V_{DDD}= 1.8 V, Buck ON, Max at 60°C
			–	2.4	3.3	mA	V_{DDD} = 1.8 to 3.3 V, LDO, Max at 85°C
Cortex® M0+. Minimum Regulator Current Mode							

(table continues...)

Table 15 (continued) CPU current and transition times

Spec ID#	Parameter	Description	Min	Typ	Max	Unit	Details/ Conditions
SIDLPS3	I_{DD22}	CM4 Off, CM0+ Sleep 8 MHz. With IMO.	–	0.6	1.1	mA	V_{DDD}= 3.3 V, Buck ON, Max at 60°C
			–	0.9	1.5	mA	V_{DDD}= 1.8 V, Buck ON, Max at 60°C
			–	2.4	3.3	mA	V_{DDD} = 1.8 to 3.3 V, LDO, Max at 85°C
ULP RANGE POWER SPECIFICATIONS (for VCCD = 0.9 V using the Buck). ULP mode is valid from –20 to +85°C.							
Cortex® M4. Active Mode							
Execute with Cache Disabled (Flash)							
SIDF5	I_{DD3}	Execute from Flash; CM4 Active 50 MHz, CM0+ Sleep 25 MHz. With IMO & FLL. While(1).	–	1.7	2.2	mA	V_{DDD}= 3.3 V, Buck ON, Max at 60°C
			–	2.1	2.4	mA	V_{DDD}= 1.8 V, Buck ON, Max at 60°C
SIDF6	I_{DD4}	Execute from Flash; CM4 Active 8 MHz, CM0+ Sleep 8 MHz. With IMO. While (1)	–	0.56	0.8	mA	V_{DDD}= 3.3 V, Buck ON, Max at 60°C
			–	0.75	1	mA	V_{DDD}= 1.8 V, Buck ON, Max at 60°C
Execute with Cache Enabled							
SIDC8	I_{DD10}	Execute from Cache; CM4 Active 50 MHz, CM0+ Sleep 25 MHz. With IMO & FLL. Dhrystone.	–	1.6	2.2	mA	V_{DDD}= 3.3 V, Buck ON, Max at 60°C
			–	2.4	2.7	mA	V_{DDD}= 1.8 V, Buck ON, Max at 60°C

(table continues...)

Table 15 (continued) CPU current and transition times

Spec ID#	Parameter	Description	Min	Typ	Max	Unit	Details/ Conditions
SIDC9	I_{DD11}	Execute from Cache; CM4 Active 8 MHz, CM0+ Sleep 8 MHz. With IMO. Dhrystone.	–	0.65	0.8	mA	V_{DDD}= 3.3 V, Buck ON, Max at 60°C
			–	0.8	1.1	mA	V_{DDD}= 1.8 V, Buck ON, Max at 60°C
Cortex® M0+. Active Mode							
Execute with Cache Disabled (Flash)							
SIDF7	I_{DD16}	Execute from Flash; CM4 Off, CM0+ Active 25 MHz. With IMO & FLL. Write(1).	–	1	1.4	mA	V_{DDD}= 3.3 V, Buck ON, Max at 60°C
			–	1.34	1.6	mA	V_{DDD}= 1.8 V, Buck ON, Max at 60°C
SIDF8	I_{DD17}	Execute from Flash; CM4 Off, CM0+ Active 8 MHz. With IMO. While(1).	–	0.54	0.75	mA	V_{DDD}= 3.3 V, Buck ON, Max at 60°C
			–	0.73	1	mA	V_{DDD}= 1.8 V, Buck ON, Max at 60°C
Execute with Cache Enabled							
SIDC10	I_{DD18}	Execute from Cache; CM4 Off, CM0+ Active 25 MHz. With IMO & FLL. Dhrystone.	–	0.91	1.25	mA	V_{DDD}= 3.3 V, Buck ON, Max at 60°C
			–	1.34	1.6	mA	V_{DDD}= 1.8 V, Buck ON, Max at 60°C
SIDC11	I_{DD19}	Execute from Cache; CM4 Off, CM0+ Active 8 MHz. With IMO. Dhrystone.	–	0.51	0.72	mA	V_{DDD}= 3.3 V, Buck ON, Max at 60°C
			–	0.73	0.95	mA	V_{DDD}= 1.8 V, Buck ON, Max at 60°C
Cortex® M4. Sleep Mode							

(table continues...)

Table 15 (continued) CPU current and transition times

Spec ID#	Parameter	Description	Min	Typ	Max	Unit	Details/ Conditions
SIDS7	I_{DD21}	CM4 Sleep 50 MHz, CM0+ Sleep 25 MHz. With IMO & FLL.	–	0.76	1.1	mA	V_{DDD}= 3.3 V, Buck ON, Max at 60°C
			–	1.1	1.4	mA	V_{DDD}= 1.8 V, Buck ON, Max at 60°C
SIDS8	I_{DD22}	CM4 Sleep 8 MHz, CM0+ Sleep 8 MHz. With IMO.	–	0.42	0.65	mA	V_{DDD}= 3.3 V, Buck ON, Max at 60°C
			–	0.59	0.8	mA	V_{DDD}= 1.8 V, Buck ON, Max at 60°C
Cortex® M0+. Sleep Mode							
SIDS9	I_{DD23}	CM4 Off, CM0+ Sleep 25 MHz. With IMO & FLL.	–	0.62	0.9	mA	V_{DDD}= 3.3 V, Buck ON, Max at 60°C
			–	0.88	1.1	mA	V_{DDD}= 1.8 V, Buck ON, Max at 60°C
SIDS10	I_{DD24}	CM4 Off, CM0+ Sleep 8 MHz. With IMO.	–	0.41	0.6	mA	V_{DDD}= 3.3 V, Buck ON, Max at 60°C
			–	0.58	0.8	mA	V_{DDD}= 1.8 V, Buck ON, Max at 60°C
Cortex® M4. Minimum Regulator Current Mode							
SIDLPA5	I_{DD25}	Execute from Flash. CM4 Active 8 MHz, CM0+ Sleep 8 MHz. With IMO. While(1).	–	0.52	0.75	mA	V_{DDD}= 3.3 V, Buck ON, Max at 60°C
			–	0.76	1	mA	V_{DDD}= 1.8 V, Buck ON, Max at 60°C
SIDLPA6	I_{DD26}	Execute from Cache. CM4 Active 8 MHz, CM0+ Sleep 8 MHz. With IMO. Dhrystone.	–	0.54	0.76	mA	V_{DDD}= 3.3 V, Buck ON, Max at 60°C
			–	0.78	1	mA	V_{DDD}= 1.8 V, Buck ON, Max at 60°C

(table continues...)

Table 15 (continued) CPU current and transition times

Spec ID#	Parameter	Description	Min	Typ	Max	Unit	Details/ Conditions
Cortex® M0+. Minimum Regulator Current Mode							
SIDLPA7	I_{DD27}	Execute from Flash. CM4 Off, CM0+ Active 8 MHz. With IMO. While (1).	–	0.51	0.75	mA	V_{DDD}= 3.3 V, Buck ON, Max at 60°C
			–	0.75	1	mA	V_{DDD}= 1.8 V, Buck ON, Max at 60°C
SIDLPA8	I_{DD28}	Execute from Cache. CM4 Off, CM0+ Active 8 MHz. With IMO. Dhrystone.	–	0.48	0.7	mA	V_{DDD}= 3.3 V, Buck ON, Max at 60°C
			–	0.7	0.95	mA	V_{DDD}= 1.8 V, Buck ON, Max at 60°C
Cortex® M4. Minimum Regulator Current Mode							
SIDLPS5	I_{DD29}	CM4 Sleep 8 MHz, CM0 Sleep 8 MHz. With IMO.	–	0.4	0.6	mA	V_{DDD}= 3.3 V, Buck ON, Max at 60°C
			–	0.57	0.8	mA	V_{DDD}= 1.8 V, Buck ON, Max at 60°C
Cortex® M0+. Minimum Regulator Current Mode							
SIDLPS7	I_{DD31}	CM4 Off, CM0+ Sleep 8 MHz. With IMO.	–	0.39	0.6	mA	V_{DDD}= 3.3 V, Buck ON, Max at 60°C
			–	0.56	0.8	mA	V_{DDD}= 1.8 V, Buck ON, Max at 60°C
Deep Sleep Mode							
SIDDS1	I_{DD33A}	With internal buck enabled and 64K SRAM retention	–	7	–	µA	Max value is at 85°C

(table continues...)

Table 15 (continued) CPU current and transition times

Spec ID#	Parameter	Description	Min	Typ	Max	Unit	Details/ Conditions
SIDDS1_B	I_{DD33A_B}	With internal buck enabled and 64K SRAM retention	–	7	–	µA	Max value is at 60°C
SIDDS2	I_{DD33B}	With internal buck enabled and 256K SRAM retention	–	9	–	µA	Max value is at 85°C
SIDDS2	I_{DD33B}	With internal buck enabled and 160K SRAM retention	–	11	–	µA	
SIDDS2_B	I_{DD33B_B}	With internal buck enabled and 256K SRAM retention	–	9	–	µA	Max value is at 60°C
Hibernate Mode							
SIDHIB1	I_{DD34}	V_{DDD} = 1.8 V	–	300	–	nA	No clocks running
SIDHIB2	I_{DD34A}	V_{DDD} = 3.3 V	–	800	–	nA	No clocks running
Power Mode Transition Times							
SID12	T_{LPACT_ACT}	Minimum regulator current to LP transition time	–	–	35	µs	Including PLL lock time

(table continues...)

Table 15 (continued) CPU current and transition times

Spec ID#	Parameter	Description	Min	Typ	Max	Unit	Details/ Conditions
SID13	T_{DS_LPACT}	Deep Sleep to LP transition time	–	–	25	µs	Guaranteed by design
SID14	T_{HIB_ACT}	Hibernate to LP transition time	–	500	–	µs	Including PLL lock time

6.2.3 XRES

Table 16 XRES DC specifications

Spec ID#	Parameter	Description	Min	Typ	Max	Unit	Details/ Conditions
SID17	T_{XRES_IDD}	IDD when XRES asserted	–	300	–	nA	V_{DDD} = 1.8 V
SID17A	$T_{XRES_IDD_1}$	IDD when XRES asserted	–	800	–	nA	V_{DDD} = 3.3 V
SID77	V_{IH}	Input voltage high threshold	0.7 × V_{DD}	–	–	V	CMOS Input
SID78	V_{IL}	Input voltage low threshold	–	–	0.3 × V_{DD}	V	CMOS Input
SID80	C_{IN}	Input capacitance	–	3	–	pF	–
SID81	$V_{HYSXRES}$	Input voltage hysteresis	–	100	–	mV	–
SID82	I_{DIODE}	Current through protection diode to V_{DD}/V_{SS}	–	–	100	µA	–

Table 17 XRES AC specifications

Spec ID#	Parameter	Description	Min	Typ	Max	Unit	Details/ Conditions
SID15	T_{XRES_ACT}	Time from XRES release to Cortex®-M0+ executing application code	–	750	–	µs	Not minimum regulator current mode; Cortex®-M0+ executing at 50 MHz
SID16	T_{XRES_PW}	XRES Pulse width	5	–	–	µs	–

6.2.4 GPIO

Table 18 GPIO DC specifications

Spec ID#	Parameter	Description	Min	Typ	Max	Unit	Details/ Conditions
SID57	V_{IH}	Input voltage high threshold	$0.7 \times V_{DD}$	–	–	V	CMOS Input
SID57A	I_{IHS}	Input current when Pad > V_{DDIO} for OVT inputs	–	–	10	µA	Per I^2C Spec
SID58	V_{IL}	Input voltage low threshold	–	–	$0.3 \times V_{DD}$	V	CMOS Input
SID241	V_{IH}	LVTTL input, $V_{DD} < 2.7$ V	$0.7 \times V_{DD}$	–	–	V	–
SID242	V_{IL}	LVTTL input, $V_{DD} < 2.7$ V	–	–	$0.3 \times V_{DD}$	V	–
SID243	V_{IH}	LVTTL input, $V_{DD} \geq 2.7$ V	2.0	–	–	V	–
SID244	V_{IL}	LVTTL input, $V_{DD} \geq 2.7$ V	–	–	0.8	V	–
SID59	V_{OH}	Output voltage high level	$V_{DD} - 0.5$	–	–	V	$I_{OH} = 8$ mA
SID62A	V_{OL}	Output voltage low level	–	–	0.4	V	$I_{OL} = 8$ mA

(table continues...)

Table 18 (continued) GPIO DC specifications

Spec ID#	Parameter	Description	Min	Typ	Max	Unit	Details/ Conditions
SID63	R_{PULLUP}	Pull-up resistor	3.5	5.6	8.5	kΩ	–
SID64	$R_{PULLDOWN}$	Pull-down resistor	3.5	5.6	8.5	kΩ	–
SID65	I_{IL}	Input leakage current (absolute value)	–	–	2	nA	25 °C, V_{DD} = 3.0 V
SID65A	I_{IL_CTBM}	Input leakage on CTBm input pins	–	–	4	nA	–
SID66	C_{IN}	Input Capacitance	–	–	5	pF	–
SID67	V_{HYSTTL}	Input hysteresis LVTTL V_{DD} > 2.7 V	100	0	–	mV	–
SID68	$V_{HYSCMOS}$	Input hysteresis CMOS	0.05 × V_{DD}	–	–	mV	–
SID69	I_{DIODE}	Current through protection diode to V_{DD}/V_{SS}	–	–	100	µA	–
SID69A	I_{TOT_GPIO}	Maximum total source or sink Chip Current	–	–	200	mA	–

Table 19 GPIO AC specifications

Spec ID#	Parameter	Description	Min	Typ	Max	Unit	Details/ Conditions
SID70	T_{RISEF}	Rise time in Fast Strong Mode. 10% to 90% of V_{DD}	–	–	2.5	ns	Cload = 15 pF, 8 mA drive strength

(table continues...)

Table 19 (continued) GPIO AC specifications

Spec ID#	Parameter	Description	Min	Typ	Max	Unit	Details/ Conditions
SID71	T_{FALLF}	Fall time in Fast Strong Mode. 10% to 90% of V_{DD}	–	–	2.5	ns	Cload = 15 pF, 8 mA drive strength
SID72	T_{RISES_1}	Rise time in Slow Strong Mode. 10% to 90% of V_{DD}	52	–	142	ns	Cload = 15 pF, 8 mA drive strength, $V_{DD} \leq 2.7$ V
SID72A	T_{RISES_2}	Rise time in Slow Strong Mode. 10% to 90% of V_{DD}	48	–	102	ns	Cload = 15 pF, 8 mA drive strength, 2.7 V < $V_{DD} \leq$ 3.6 V
SID73	T_{FALLS_1}	Fall time in Slow Strong Mode. 10% to 90% of V_{DD}	44	–	211	ns	Cload = 15 pF, 8 mA drive strength, $V_{DD} \leq 2.7$ V
SID73A	T_{FALLS_2}	Fall time in Slow Strong Mode. 10% to 90% of V_{DD}	42	–	93	ns	Cload = 15 pF, 8 mA drive strength, 2.7 V < $V_{DD} \leq$ 3.6 V
SID73G	$T_{FALL_I^2C}$	Fall time (30% to 70% of V_{DD}) in Slow Strong mode	20 × V_{DDIO}/ 5 .5	–	250	ns	Cload = 10 pF to 400 pF, 8-mA drive strength
SID74	$F_{GPIOUT1}$	GPIO Fout. Fast Strong mode.	–	–	100	MHz	90/10%, 15-pF load, 60/40 duty cycle
SID75	$F_{GPIOUT2}$	GPIO Fout; Slow Strong mode.	–	–	16.7	MHz	90/10%, 15-pF load, 60/40 duty cycle

(table continues...)

Table 19 (continued) GPIO AC specifications

Spec ID#	Parameter	Description	Min	Typ	Max	Unit	Details/ Conditions
SID76	$F_{GPIOUT3}$	GPIO Fout; Fast Strong mode.	–	–	7	MHz	90/10%, 25-pF load, 60/40 duty cycle
SID245	$F_{GPIOUT4}$	GPIO Fout; Slow Strong mode.	–	–	3.5	MHz	90/10%, 25-pF load, 60/40 duty cycle
SID246	F_{GPIOIN}	GPIO input operating frequency;1.71 V ≤ V_{DD}≤ V	–	–	100	MHz	90/10% V_{IO}

6.3 Analog peripherals

6.3.1 Opamp

Table 20 Opamp specifications

Spec ID#	Parameter	Description	Min	Typ	Max	Unit	Details/ Conditions
	I_{DD}	Opamp block current. No load.	–	–	–		–
SID269	I_{DD_HI}	Power = Hi	–	1300	1500	µA	–
SID270	I_{DD_MED}	Power = Med	–	450	600	µA	–
SID271	I_{DD_LOW}	Power = Lo	–	250	350	µA	–
	GBW	Load = 50 pF, 0.1 mA. V_{DDA} ≥ 2.7 V	–	–	–		–
SID272	G_{BW_HI}	Power = Hi	6	–	–	MHz	–
SID273	G_{BW_MED}	Power = Med	3	–	–	MHz	–
SID274	G_{BW_LO}	Power = Lo	1	–	–	MHz	–
	I_{OUT_MAX}	V_{DDA} = 2.7 V, 500 mV from rail	–	–	–		–

(table continues...)

Table 20 (continued) Opamp specifications

Spec ID#	Parameter	Description	Min	Typ	Max	Unit	Details/ Conditions
SID275	$I_{OUT_MAX_HI}$	Power = Hi	10	–	–	mA	–
SID276	$I_{OUT_MAX_MID}$	Power = Med	10	–	–	mA	–
SID277	$I_{OUT_MAX_LO}$	Power = Lo	–	5	–	mA	–
	I_{OUT}	V_{DDA} = 1.71 V, 500 mV from rail	–	–	–		–
SID278	$I_{OUT_MAX_HI}$	Power = Hi	4	–	–	mA	–
SID279	$I_{OUT_MAX_MID}$	Power = Med	4	–	–	mA	–
SID280	$I_{OUT_MAX_LO}$	Power = Lo	–	2	–	mA	–
SID281	V_{IN}	Input voltage range	0	–	V_{DDA} – 0.2	V	Charge pump ON
SID282	V_{CM}	Input common mode voltage	0	–	V_{DDA} – 1.5	V	Charge pump OFF, $V_{DDA} \geq 2.7$ V
	V_{OUT}	$V_{DDA} \geq 2.7$ V	–	–	–		–
SID283	V_{OUT_1}	Power = Hi, Iload = 10 mA	0.5	–	V_{DDA} – 0.5	V	–
SID284	V_{OUT_2}	Power = Hi, Iload = 1 mA	0.2	–	V_{DDA} – 0.2	V	–
SID285	V_{OUT_3}	Power = Med, Iload = 1 mA	0.2	–	V_{DDA} – 0.2	V	–
SID286	V_{OUT_4}	Power = Lo, Iload = 0.1 mA	0.2	–	V_{DDA} – 0.2	V	–
SID288	V_{OS_TR}	Offset voltage	–1	±0.5	1	mV	Power = Hi, 0.2 V < V_{OUT} < (V_{DDA}- 0.2 V)
SID288A	V_{OS_TR}	Offset voltage	–	±1	–	mV	Power = Med
SID288B	V_{OS_TR}	Offset voltage	–	±2	–	mV	Power = Lo

(table continues...)

Table 20 (continued) Opamp specifications

Spec ID#	Parameter	Description	Min	Typ	Max	Unit	Details/ Conditions
SID290	$V_{OS_DR_TR}$	Offset voltage drift	–10	±3	10	µV/°C	Power = Hi, 0.2 V < V_{OUT}< (V_{DDA}- 0.2 V)
SID290A	$V_{OS_DR_TR}$	Offset voltage drift	–	±10	–	µV/°C	Power = Med
SID290B	$V_{OS_DR_TR}$	Offset voltage drift	–	±10	–	µV/°C	Power = Lo
SID291	CMRR	DC common mode rejection ratio	67	80	–	dB	V_{DDA} ≥ 2.7 V
SID292	PSRR	Power supply rejection ratio at 1 kHz, 10-mV ripple	70	85	–	dB	V_{DDA} ≥ 2.7 V
SID65A	I_{IL_CTBM}	Input leakage on CTBm input pins	–	–	4	nA	–
Noise							
SID293	VN1	Input-referred, 1 Hz – 1 GHz, power = Hi	–	100	–	µVrms	–
SID294	VN2	Input-referred, 1 kHz, power = Hi	–	180	–	nV/rtHz	–
SID295	VN3	Input-referred, 10 kHz, power = Hi	–	70	–	nV/rtHz	–
SID296	VN4	Input-referred, 100 kHz, power = Hi	–	38	–	nV/rtHz	–

(table continues...)

Table 20 (continued) Opamp specifications

Spec ID#	Parameter	Description	Min	Typ	Max	Unit	Details/ Conditions
SID297	CLOAD	Stable up to max. load. Performance specs at 50 pF.	–	–	125	pF	–
SID298	SLEW_RATE	Output slew rate	4	–	–	V/µs	Cload = 50 pF, Power = Hi, $V_{DDA} \geq 2.7$ V Refer to Figure 19 and Figure 20.
SID299	T_OP_WAKE	From disable to enable, no external RC dominating	–	25	–	µs	–
	COMP_MODE	Comparator mode; 50-mV overdrive, Trise = Tfall (approx.)	–		–		–
SID300	T_{PD1}	Response time; power = Hi	–	150	–	ns	–
SID301	T_{PD2}	Response time; power = Med	–	400	–	ns	–
SID302	T_{PD3}	Response time; power = Lo	–	2000	–	ns	–
SID303	V_{HYST_OP}	Hysteresis	–	10	–	mV	–
Deep Sleep Mode		Mode 2 is lowest current range. Mode 1 has higher GBW.					Deep Sleep mode operation: $V_{DDA} \geq 2.7$ V. V_{IN} is 0.2 to V_{DDA} –1.5 V
SID_DS_1	$I_{DD_HI_M1}$	Mode 1, High current	–		1500	µA	Typ at 25 °C

(table continues...)

Table 20 (continued) Opamp specifications

Spec ID#	Parameter	Description	Min	Typ	Max	Unit	Details/ Conditions
SID_DS_2	$I_{DD_MED_M1}$	Mode 1, Medium current	–	460	600	µA	Typ at 25 °C
SID_DS_3	$I_{DD_LOW_M1}$	Mode 1, Low current	–	230	350	µA	Typ at 25 °C
SID_DS_4	$I_{DD_HI_M2}$	Mode 2, High current	–	120	–	µA	25 °C
SID_DS_5	$I_{DD_MED_M2}$	Mode 2, Medium current	–	60	–	µA	25 °C
SID_DS_6	$I_{DD_LOW_M2}$	Mode 2, Low current	–	15	–	µA	25 °C
SID_DS_7	GBW_HI_M1	Mode 1, High current	–	4	–	MHz	25 °C
SID_DS_8	GBW_MED_M1	Mode 1, Medium current	–	2	–	MHz	25 °C
SID_DS_9	GBW_LOW_M1	Mode 1, Low current	–	0.5	–	MHz	25 °C
SID_DS_10	GBW_HI_M2	Mode 2, High current	–	0.5	–	MHz	20-pF load, no DC load 0.2 V to V_{DDA} – 1.5 V
SID_DS_11	GBW_MED_M2	Mode 2, Medium current	–	0.2	–	MHz	20-pF load, no DC load 0.2 V to V_{DDA} – 1.5 V
SID_DS_12	GBW_LOW_M2	Mode 2, Low current	–	0.1	–	MHz	20-pF load, no DC load 0.2 V to V_{DDA} – 1.5 V
SID_DS_13	$V_{OS_HI_M1}$	Mode 1, High current	–	5	–	mV	25 °C, 0.2 V to V_{DDA} – 1.5 V
SID_DS_14	$V_{OS_MED_M1}$	Mode 1, Medium current	–	5	–	mV	25 °C, 0.2 V to V_{DDA} – 1.5 V
SID_DS_15	$V_{OS_LOW_M1}$	Mode 1, Low current	–	5	–	mV	25 °C, 0.2 V to V_{DDA} – 1.5 V

(table continues...)

Table 20 (continued) Opamp specifications

Spec ID#	Parameter	Description	Min	Typ	Max	Unit	Details/ Conditions
SID_DS_16	$V_{OS_HI_M2}$	Mode 2, High current	–	5	–	mV	25 °C, 0.2 V to V_{DDA} – 1.5 V
SID_DS_17	$V_{OS_MED_M2}$	Mode 2, Medium current	–	5	–	mV	25 °C, 0.2 V to V_{DDA} – 1.5 V
SID_DS_18	$V_{OS_LOW_M2}$	Mode 2, Low current	–	5	–	mV	25 °C, 0.2 V to V_{DDA} – 1.5 V
SID_DS_19	$I_{OUT_HI_M1}$	Mode 1, High current	–	10	–	mA	Output is 0.5 V to V_{DDA} – 0.5 V
SID_DS_20	$I_{OUT_MED_M1}$	Mode 1, Medium current	–	10	–	mA	Output is 0.5 V to V_{DDA} – 0.5 V
SID_DS_21	$I_{OUT_LOW_M1}$	Mode 1, Low current	–	4	–	mA	Output is 0.5 V to V_{DDA} – 0.5 V
SID_DS_22	$I_{OUT_HI_M2}$	Mode 2, High current	–	1	–	mA	Output is 0.5 V to V_{DDA} – 0.5 V
SID_DS_23	$I_{OUT_MED_M2}$	Mode 2, Medium current	–	1	–	mA	Output is 0.5 V to V_{DDA} – 0.5 V
SID_DS_24	$I_{OUT_LOW_M2}$	Mode 2, Low current	–	0.5	–	mA	Output is 0.5 V to V_{DDA} – 0.5 V

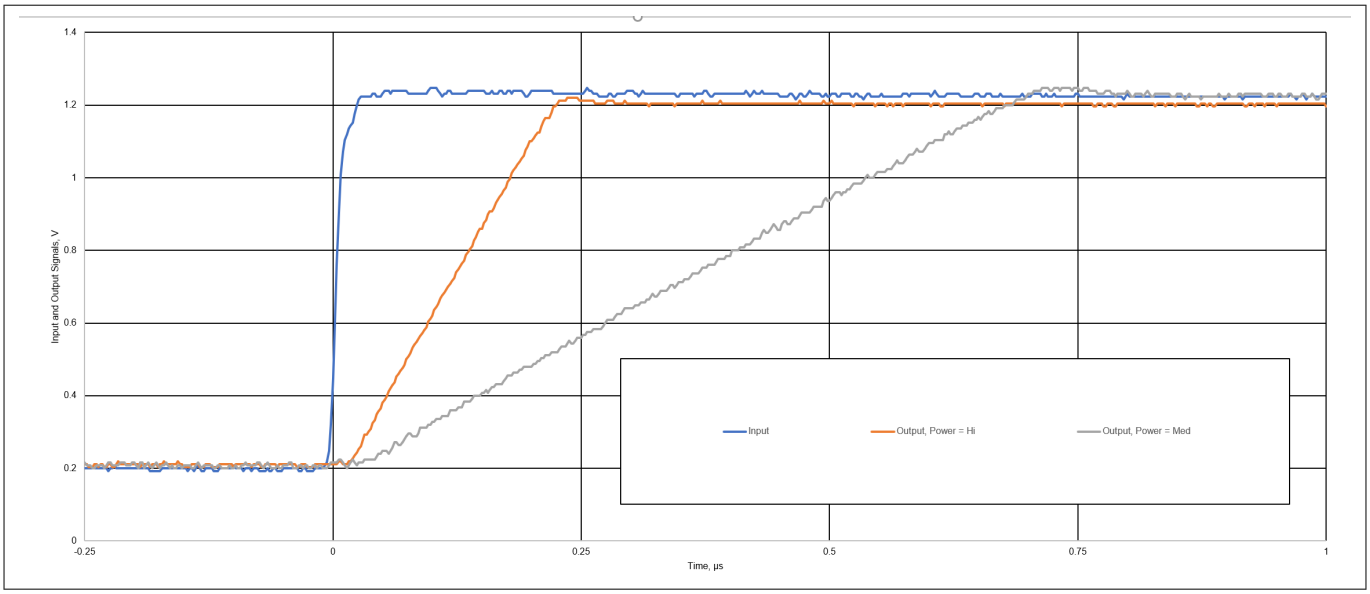

Figure 19 **Opamp Step Response, Rising**

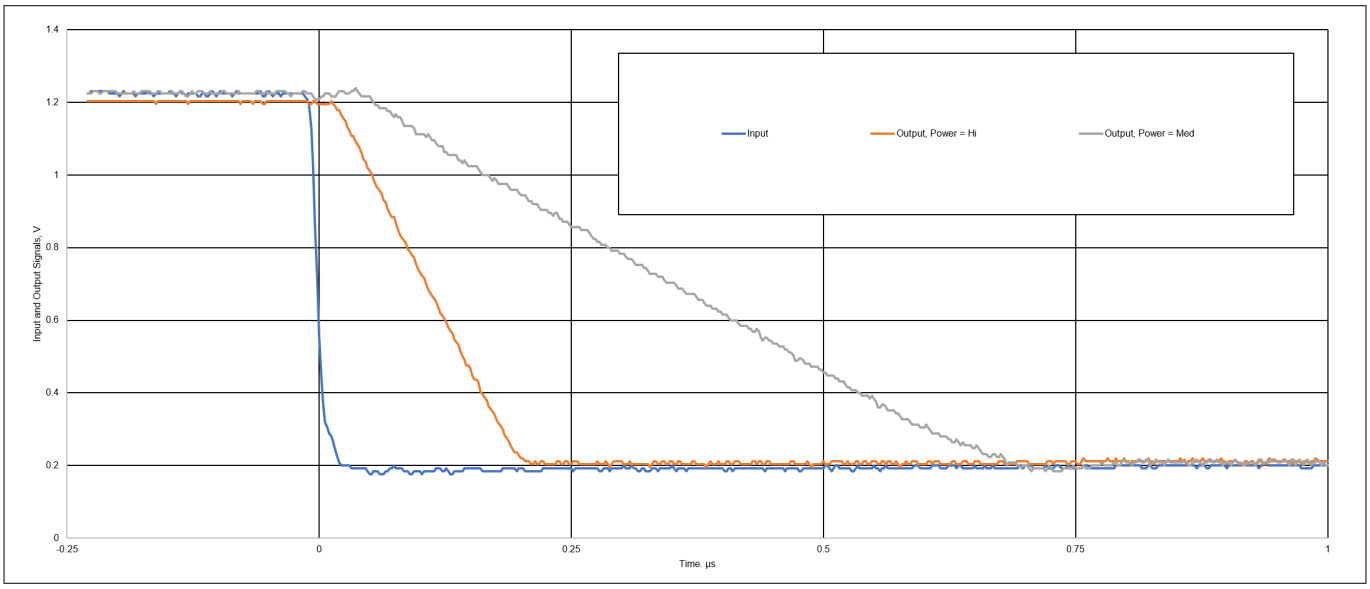

Figure 20 **Opamp Step Response, Falling**

6.3.2 Low-Power (LP) Comparator

Table 21 **LP Comparator DC specifications**

Spec ID#	Parameter	Description	Min	Typ	Max	Unit	Details/ Conditions
SID84	$V_{OFFSET1}$	Input offset voltage for COMP1. Normal power mode.	–10	–	10	mV	COMP0 offset is ±25 mV

(table continues...)

Table 21 (continued) LP Comparator DC specifications

Spec ID#	Parameter	Description	Min	Typ	Max	Unit	Details/ Conditions
SID85A	$V_{OFFSET2}$	Input offset voltage. Low-power mode.	–25	±12	25	mV	–
SID85B	$V_{OFFSET3}$	Input offset voltage. Ultra low-power mode.	–25	±12	25	mV	–
SID86	V_{HYST1}	Hysteresis when enabled in Normal mode	–	–	60	mV	–
SID86A	V_{HYST2}	Hysteresis when enabled in Low-power mode	–	–	80	mV	–
SID87	V_{ICM1}	Input common mode voltage in Normal mode	0	–	V_{DDIO1} – 0.1	V	–
SID247	V_{ICM2}	Input common mode voltage in Low power mode	0	–	V_{DDIO1} – 0.1	V	–
SID247A	V_{ICM3}	Input common mode voltage in Ultra low power mode	0	–	V_{DDIO1} – 0.1	V	–

(table continues...)

Table 21 (continued) LP Comparator DC specifications

Spec ID#	Parameter	Description	Min	Typ	Max	Unit	Details/ Conditions
SID88	CMRR	Common mode rejection ratio in Normal power mode	50	–	–	dB	–
SID89	I_{CMP1}	Block Current, Normal mode	–	–	150	µA	–
SID248	I_{CMP2}	Block Current, Low power mode	–	–	10	µA	–
SID259	I_{CMP3}	Block Current in Ultra low-power mode	–	0.3	0.85	µA	–
SID90	ZCMP	DC Input impedance of comparator	35	–	–	MΩ	–

Table 22 LP Comparator AC specifications

Spec ID#	Parameter	Description	Min	Typ	Max	Unit	Details/ Conditions
SID91	T_{RESP1}	Response time, Normal mode, 100 mV overdrive	–	–	100	ns	–
SID258	T_{RESP2}	Response time, Low power mode, 100 mV overdrive	–	–	1000	ns	–

(table continues...)

Table 22 (continued) LP Comparator AC specifications

Spec ID#	Parameter	Description	Min	Typ	Max	Unit	Details/ Conditions
SID92	T_{RESP3}	Response time, Ultra-low power mode, 100 mV overdrive	–	–	20	µs	–
SID92E	T_CMP_EN1	Time from Enabling to operation	–	–	10	µs	Normal and Low-power modes
SID92F	T_CMP_EN2	Time from Enabling to operation	–	–	50	µs	Ultra low-power mode

Table 23 Temperature sensor specifications

Spec ID#	Parameter	Description	Min	Typ	Max	Unit	Details/ Conditions
SID93	$T_{SENSACC}$	Temperature sensor accuracy	–5	±1	5	°C	–40 to +85 °C

Table 24 Internal reference specification

Spec ID#	Parameter	Description	Min	Typ	Max	Unit	Details/ Conditions
SID93R	V_{REFBG}	–	1.188	1.2	1.212	V	–

6.3.3 SAR ADC

Table 25 12-bit SAR ADC DC specifications

Spec ID#	Parameter	Description	Min	Typ	Max	Unit	Details/ Conditions
SID94	A_RES	SAR ADC Resolution	–	–	12	bits	–
SID95	A_CHNLS_S	Number of channels - single-ended	–	–	16	–	8 full speed.
SID96	A-CHNKS_D	Number of channels - differential	–	–	8	–	Diff inputs use neighboring I/O

(table continues...)

Table 25 (continued) 12-bit SAR ADC DC specifications

Spec ID#	Parameter	Description	Min	Typ	Max	Unit	Details/ Conditions
SID97	A-MONO	Monotonicity	–	–	–	–	Yes
SID98	A_GAINERR	Gain error	–	–	±0.2	%	With external reference.
SID99	A_OFFSET	Input offset voltage	–	–	2	mV	Measured with 1-V reference
SID100	A_ISAR_1	Current consumption at 1 Msps	–	–	1	mA	At 1 Msps. External Bypass Cap.
SID100A	A_ISAR_2	Current consumption at 1 Msps. Reference = V_{DD}	–	–	1.25	mA	At 1 Msps. External Bypass Cap.
SID101	A_VINS	Input voltage range - single-ended	V_{SS}	–	V_{DDA}	V	–
SID102	A_VIND	Input voltage range - differential	V_{SS}	–	V_{DDA}	V	–
SID103	A_INRES	Input resistance	–	–	2.2	kΩ	–
SID104	A_INCAP	Input capacitance	–	–	10	pF	–

Table 26 12-bit SAR ADC AC specifications

Spec ID#	Parameter	Description	Min	Typ	Max	Unit	Details/ Conditions
12-bit SAR ADC AC specifications							
SID106	A_PSRR	Power supply rejection ratio	70	–	–	dB	–

(table continues...)

Table 26 (continued) 12-bit SAR ADC AC specifications

Spec ID#	Parameter	Description	Min	Typ	Max	Unit	Details/ Conditions
SID107	A_CMRR	Common mode rejection ratio	66	–	–	dB	Measured at 1 V.
One Megasample per second mode:							
SID108	A_SAMP_1	Sample rate with external reference bypass cap.	–	–	1	Msps	–
SID108A	A_SAMP_2	Sample rate with no bypass cap; Reference = V_{DD}	–	–	250	ksps	–
SID108B	A_SAMP_3	Sample rate with no bypass cap. Internal reference.	–	–	100	ksps	–
SID109	A_SINAD	Signal-to-noise and Distortion ratio (SINAD). V_{DDA} = 2.7 to 3.6 V, 1 Msps.	64	–	–	dB	Fin = 10 kHz
SID111A	A_INL	Integral Non Linearity. V_{DDA} = 2.7 to 3.6 V, 1 Msps	–2	–	2	LSB	Measured with internal V_{REF} = 1.2 V and bypass cap.
SID111B	A_INL	Integral Non Linearity. V_{DDA} = 2.7 to 3.6 V, 1 Msps	–4	–	4	LSB	Measured with external $V_{REF} \geq 1$ V and V_{IN} common mode < 2 * Vref.

(table continues...)

Table 26 (continued) 12-bit SAR ADC AC specifications

Spec ID#	Parameter	Description	Min	Typ	Max	Unit	Details/ Conditions
SID112A	A_DNL	Differential Non Linearity. V_{DDA} = 2.7 to 3.6 V, 1 Msps	–1	–	1.4	LSB	Measured with internal V_{REF} = 1.2 V and bypass cap.
SID112B	A_DNL	Differential Non Linearity. V_{DDA} = 2.7 to 3.6 V, 1 Msps	–1	–	1.7	LSB	Measured with external V_{REF}≥ 1 V and V_{IN} common mode < 2 * Vref.
SID113	A_THD	Total harmonic distortion. V_{DDA} = 2.7 to 3.6 V, 1 Msps.	–	–	–65	dB	Fin = 10 kHz

6.3.4 DAC

Table 27 12-bit DAC DC specifications

Spec ID#	Parameter	Description	Min	Typ	Max	Unit	Details/ Conditions
SID108D	DAC_RES	DAC resolution	–	–	12	bits	–
SID111D	DAC_INL	Integral non-linearity	–4	–	4	LSB	–
SID112D	DAC_DNL	Differential non-linearity	–2	–	2	LSB	Monotonic to 11 bits.
SID99D	DAC_OFFSET	Output Voltage zero offset error	–2	–	1	mV	For 000 (hex)
SID103D	DAC_OUT_RES	DAC Output Resistance	–	15	–	kΩ	–
SID100D	DAC_IDD	DAC Current	–	–	125	µA	–

(table continues...)

Table 27 (continued) 12-bit DAC DC specifications

Spec ID#	Parameter	Description	Min	Typ	Max	Unit	Details/ Conditions
SID101D	DAC_QIDD	DAC Current when DAC stopped	–	–	1	µA	–

Table 28 12-bit DAC AC specifications

Spec ID#	Parameter	Description	Min	Typ	Max	Unit	Details/ Conditions
SID109D	DAC_CONV	DAC Settling time	–	–	2	µs	Driving through CTBm buffer; 25-pF load
SID110D	DAC_Wakeup	Time from Enabling to ready for conversion	–	–	10	µs	–

6.3.5 CSD

Table 29 Capacitive sigma-delta (CSD) specifications

Spec ID#	Parameter	Description	Min	Typ	Max	Unit	Details/ Conditions
CSD V2 specifications							
SYS.PER#3	V_{DD_RIPPLE}	Max allowed ripple on power supply, DC to 10 MHz	–	–	±50	mV	V_{DDA} > 2 V (with ripple), 25 °C T_A, Sensitivity = 0.1 pF
SYS.PER#16	$V_{DD_RIPPLE_1.8}$	Max allowed ripple on power supply, DC to 10 MHz	–	–	±25	mV	V_{DDA} > 1.75 V (with ripple), 25 °C T_A, Parasitic Capacitance (C_P) < 20 pF, Sensitivity ≥ 0.4 pF
SID.CSD.BLK	I_{CSD}	Maximum block current			4500	µA	–

(table continues...)

Table 29 (continued) Capacitive sigma-delta (CSD) specifications

Spec ID#	Parameter	Description	Min	Typ	Max	Unit	Details/ Conditions
SID.CSD#15	V_{REF}	Voltage reference for CSD and Comparator	0.6	1.2	V_{DDA} – 0.6	V	$V_{DDA} - V_{REF} \geq$ 0.6 V
SID.CSD#15A	V_{REF_EXT}	External Voltage reference for CSD and Comparator	0.6		V_{DDA} – 0.6	V	$V_{DDA} - V_{REF} \geq$ 0.6 V
SID.CSD#16	$I_{DAC1IDD}$	IDAC1 (7-bits) block current	–	–	1900	µA	–
SID.CSD#17	$I_{DAC2IDD}$	IDAC2 (7-bits) block current	–	–	1900	µA	–
SID308	V_{CSD}	Voltage range of operation	1.7	–	3.6	V	1.71 to 3.6 V
SID308A	$V_{COMPIDAC}$	Voltage compliance range of IDAC	0.6	–	V_{DDA} – 0.6	V	$V_{DDA} - V_{REF} \geq$ 0.6 V
SID309	$I_{DAC1DNL}$	DNL	–1	–	1	LSB	–
SID310	$I_{DAC1INL}$	INL	–3	–	3	LSB	If $V_{DDA} < 2$ V then for LSB of 2.4 µA or less
SID311	$I_{DAC2DNL}$	DNL	–1	–	1	LSB	–
SID312	$I_{DAC2INL}$	INL	–3	–	3	LSB	If $V_{DDA} < 2$ V then for LSB of 2.4 µA or less
SNRC of the following is ratio of counts of finger to noise. Guaranteed by characterization							
SID313_1A	SNRC_1	SRSS Reference. IMO + FLL Clock Source. 0.1-pF sensitivity	5	–	–	Ratio	9.5-pF max. capacitance

(table continues...)

Table 29 (continued) Capacitive sigma-delta (CSD) specifications

Spec ID#	Parameter	Description	Min	Typ	Max	Unit	Details/ Conditions
SID313_1B	SNRC_2	SRSS Reference. IMO + FLL Clock Source. 0.3-pF sensitivity	5	–	–	Ratio	31-pF max. capacitance
SID313_1C	SNRC_3	SRSS Reference. IMO + FLL Clock Source. 0.6-pF sensitivity	5	–	–	Ratio	61-pF max. capacitance
SID313_2A	SNRC_4	PASS Reference. IMO + FLL Clock Source. 0.1-pF sensitivity	5	–	–	Ratio	12-pF max. capacitance
SID313_2B	SNRC_5	PASS Reference. IMO + FLL Clock Source. 0.3-pF sensitivity	5	–	–	Ratio	47-pF max. capacitance
SID313_2C	SNRC_6	PASS Reference. IMO + FLL Clock Source. 0.6-pF sensitivity	5	–	–	Ratio	86-pF max. capacitance
SID313_3A	SNRC_7	PASS Reference. IMO + PLL Clock Source. 0.1-pF sensitivity	5	–	–	Ratio	27-pF max. capacitance

(table continues...)

Table 29 (continued) Capacitive sigma-delta (CSD) specifications

Spec ID#	Parameter	Description	Min	Typ	Max	Unit	Details/ Conditions
SID313_3B	SNRC_8	PASS Reference. IMO + PLL Clock Source. 0.3-pF sensitivity	5	–	–	Ratio	86-pF max. capacitance
SID313_3C	SNRC_9	PASS Reference. IMO + PLL Clock Source. 0.6-pF sensitivity	5	–	–	Ratio	168-pF max. capacitance
SID314	$I_{DAC1CRT1}$	Output current of IDAC1 (7 bits) in low range	4.2		5.7	µA	LSB = 37.5-nA typ
SID314A	$I_{DAC1CRT2}$	Output current of IDAC1(7 bits) in medium range	33.7		45.6	µA	LSB = 300-nA typ.
SID314B	$I_{DAC1CRT3}$	Output current of IDAC1(7 bits) in high range	270		365	µA	LSB = 2.4-µA typ.
SID314C	$I_{DAC1CRT12}$	Output current of IDAC1 (7 bits) in low range, 2X mode	8		11.4	µA	LSB = 37.5-nA typ. 2X output stage
SID314D	$I_{DAC1CRT22}$	Output current of IDAC1(7 bits) in medium range, 2X mode	67		91	µA	LSB = 300-nA typ. 2X output stage

(table continues...)

Table 29 (continued) Capacitive sigma-delta (CSD) specifications

Spec ID#	Parameter	Description	Min	Typ	Max	Unit	Details/ Conditions
SID314E	$I_{DAC1CRT32}$	Output current of IDAC1(7 bits) in high range, 2X mode. V_{DDA} > 2 V	540		730	µA	LSB = 2.4-µA typ. 2X output stage
SID315	$I_{DAC2CRT1}$	Output current of IDAC2 (7 bits) in low range	4.2		5.7	µA	LSB = 37.5-nA typ.
SID315A	$I_{DAC2CRT2}$	Output current of IDAC2 (7 bits) in medium range	33.7		45.6	µA	LSB = 300-nA typ.
SID315B	$I_{DAC2CRT3}$	Output current of IDAC2 (7 bits) in high range	270		365	µA	LSB = 2.4-µA typ.
SID315C	$I_{DAC2CRT12}$	Output current of IDAC2 (7 bits) in low range, 2X mode	8		11.4	µA	LSB = 37.5-nA typ. 2X output stage
SID315D	$I_{DAC2CRT22}$	Output current of IDAC2(7 bits) in medium range, 2X mode	67		91	µA	LSB = 300-nA typ. 2X output stage
SID315E	$I_{DAC2CRT32}$	Output current of IDAC2(7 bits) in high range, 2X mode. V_{DDA} > 2 V	540		730	µA	LSB = 2.4-µA typ. 2X output stage

(table continues...)

Table 29 (continued) Capacitive sigma-delta (CSD) specifications

Spec ID#	Parameter	Description	Min	Typ	Max	Unit	Details/ Conditions
SID315F	$I_{DAC3CRT13}$	Output current of IDAC in 8-bit mode in low range	8		11.4	µA	LSB = 37.5-nA typ.
SID315G	$I_{DAC3CRT23}$	Output current of IDAC in 8-bit mode in medium range	67		91	µA	LSB = 300-nA typ.
SID315H	$I_{DAC3CRT33}$	Output current of IDAC in 8-bit mode in high range. V_{DDA} > 2V	540		730	µA	LSB = 2.4-µA typ.
SID320	$I_{DACOFFSET}$	All zeroes input	–	–	1	LSB	Polarity set by Source or Sink
SID321	$I_{DACGAIN}$	Full-scale error less offset	–	–	±15	%	LSB = 2.4-µA typ.
SID322	$I_{DACMISMATCH1}$	Mismatch between IDAC1 and IDAC2 in Low mode	–	–	9.2	LSB	LSB = 37.5-nA typ.
SID322A	$I_{DACMISMATCH2}$	Mismatch between IDAC1 and IDAC2 in Medium mode	–	–	6	LSB	LSB = 300-nA typ.
SID322B	$I_{DACMISMATCH3}$	Mismatch between IDAC1 and IDAC2 in High mode	–	–	5.8	LSB	LSB = 2.4-µA typ.
SID323	$I_{DACSET8}$	Settling time to 0.5 LSB for 8-bit IDAC	–	–	10	µs	Full-scale transition. No external load.

(table continues...)

Table 29 (continued) Capacitive sigma-delta (CSD) specifications

Spec ID#	Parameter	Description	Min	Typ	Max	Unit	Details/ Conditions
SID324	$I_{DACSET7}$	Settling time to 0.5 LSB for 7-bit IDAC	–	–	10	µs	Full-scale transition. No external load.
SID325	CMOD	External modulator capacitor.	–	2.2	–	nF	5-V rating, X7R or NP0 cap.

Table 30 CSD ADC specifications

Spec ID#	Parameter	Description	Min	Typ	Max	Unit	Details/ Conditions
CSDv2 ADC specifications							
SIDA94	A_RES	Resolution	–	–	10	bits	Auto-zeroing is required every millisecond
SID95	A_CHNLS_S	Number of channels - single ended	–	–	–	16	–
SIDA97	A-MONO	Monotonicity	–	–	Yes	–	V_{REF} mode
SIDA98	A_GAINERR_V_{REF}	Gain error	–	0.6	–	%	Reference Source: SRSS (V_{REF}= 1.20 V, V_{DDA}< 2.2 V), (V_{REF}= 1.6 V, 2.2 V < V_{DDA}< 2.7 V), (V_{REF}= 2.13 V, V_{DDA}> 2.7 V)

(table continues...)

Table 30 (continued) CSD ADC specifications

Spec ID#	Parameter	Description	Min	Typ	Max	Unit	Details/ Conditions
SIDA98A	A_GAINERR _VDDA	Gain error	–	0.2	–	%	Reference Source: SRSS (V_{REF}= 1.20 V, V_{DDA}< 2.2V), (V_{REF}= 1.6 V, 2.2 V < V_{DDA} < 2.7 V), (V_{REF}= 2.13 V, V_{DDA} > 2.7 V)
SIDA99	A_OFFSET_ V_{REF}	Input offset voltage	–	0.5	–	LSB	After ADC calibration, Ref. Src = SRSS, (V_{REF}= 1.20 V, V_{DDA} < 2.2 V), (V_{REF}= 1.6 V, 2.2 V < V_{DDA} < 2.7 V), (V_{REF}= 2.13 V, V_{DDA}> 2.7 V)
SIDA99A	A_OFFSET_ VDDA	Input offset voltage	–	0.5	–	LSB	After ADC calibration, Ref. Src = SRSS, (V_{REF}= 1.20 V, V_{DDA} < 2.2 V), (V_{REF}= 1.6 V, 2.2 V < V_{DDA} < 2.7 V), (V_{REF}= 2.13 V, V_{DDA}> 2.7 V)
SIDA100	A_ISAR_V_{REF}	Current consumptio n	–	0.3	–	mA	CSD ADC Block current
SIDA100A	A_ISAR_VDD A	Current consumptio n	–	0.3	–	mA	CSD ADC Block current

(table continues...)

Table 30 (continued) CSD ADC specifications

Spec ID#	Parameter	Description	Min	Typ	Max	Unit	Details/ Conditions
SIDA101	A_VINS_V_{REF}	Input voltage range - single ended	V_{SSA}	–	V_{REF}	V	(V_{REF}= 1.20 V, V_{DDA} < 2.2 V), (V_{REF}= 1.6 V, 2.2 V < V_{DDA} < 2.7 V), (V_{REF}= 2.13 V, V_{DDA}> 2.7 V)
SIDA101A	A_VINS_VDDA	Input voltage range - single ended	V_{SSA}	–	V_{DDA}	V	(V_{REF}= 1.20 V, V_{DDA} < 2.2 V), (V_{REF}= 1.6 V, 2.2 V < V_{DDA} < 2.7 V), (V_{REF}= 2.13 V, V_{DDA}> 2.7 V)
SIDA103	A_INRES	Input charging resistance	–	15	–	kΩ	–
SIDA104	A_INCAP	Input capacitance	–	41	–	pF	–
SIDA106	A_PSRR	Power supply rejection ratio (DC)	–	60	–	dB	–
SIDA107	A_TACQ	Sample acquisition time	–	10	–	µs	Measured with 50-Ω source impedance. 10 µs is default software driver acquisition time setting. Settling to within 0.05%.

(table continues...)

Table 30 (continued) CSD ADC specifications

Spec ID#	Parameter	Description	Min	Typ	Max	Unit	Details/ Conditions
SIDA108	A_CONV8	Conversion time for 8-bit resolution at conversion rate = Fhclk/(2"(N+2)). Clock frequency = 50 MHz.	–	25	–	µs	Does not include acquisition time.
SIDA108A	A_CONV10	Conversion time for 10-bit resolution at conversion rate = Fhclk/(2"(N+2)). Clock frequency = 50 MHz.	–	60	–	µs	Does not include acquisition time.
SIDA109	A_SND_VRE	Signal-to-noise and Distortion ratio (SINAD)	–	57	–	dB	Measured with 50-Ω source impedance
SIDA109A	A_SND_VDDA	Signal-to-noise and Distortion ratio (SINAD)	–	52	–	dB	Measured with 50-Ω source impedance
SIDA111	A_INL_V_{REF}	Integral non-linearity. 11.6 ksps	–	–	2	LSB	Measured with 50-Ω source impedance
SIDA111A	A_INL_VDDA	Integral non-linearity. 11.6 ksps	–	–	2	LSB	Measured with 50-Ω source impedance
SIDA112	A_DNL_V_{REF}	Differential non-linearity. 11.6 ksps	–	–	1	LSB	Measured with 50-Ω source impedance

(table continues...)

Table 30 (continued) CSD ADC specifications

Spec ID#	Parameter	Description	Min	Typ	Max	Unit	Details/ Conditions
SIDA112A	A_DNL_VDDA	Differential non-linearity. 11.6 ksps	–	–	1	LSB	Measured with 50-Ω source impedance

6.4 Digital peripherals

Table 31 TCPWM specifications

Spec ID#	Parameter	Description	Min	Typ	Max	Unit	Details/ Conditions
SID.TCPWM.1	I_{TCPWM1}	Block current consumption at 8 MHz	–	–	70	µA	All modes (TCPWM)
SID.TCPWM.2	I_{TCPWM2}	Block current consumption at 24 MHz	–	–	180	µA	All modes (TCPWM)
SID.TCPWM.2A	I_{TCPWM3}	Block current consumption at 50 MHz	–	–	270	µA	All modes (TCPWM)
SID.TCPWM.2B	I_{TCPWM4}	Block current consumption at 100 MHz	–	–	540	µA	All modes (TCPWM)
SID.TCPWM.3	$TCPWM_{FREQ}$	Operating frequency	–	–	100	MHz	Fc max = Fcpu Maximum = 100 MHz

(table continues...)

Table 31 (continued) TCPWM specifications

Spec ID#	Parameter	Description	Min	Typ	Max	Unit	Details/ Conditions
SID.TCPWM.4	$TPWM_{ENEXT}$	Input Trigger Pulse Width for all Trigger Events	2 / Fc	–	–	ns	Trigger Events can be Stop, Start, Reload, Count, Capture, or Kill depending on which mode of operation is selected. Fc is counter operating frequency.
SID.TCPWM.5	$TPWM_{EXT}$	Output Trigger Pulse widths	1.5 / Fc	–	–	ns	Minimum possible width of Overflow, Underflow, and CC (Counter equals Compare value) trigger outputs
SID.TCPWM.5A	TC_{RES}	Resolution of Counter	1 / Fc	–	–	ns	Minimum time between successive counts
SID.TCPWM.5B	PWM_{RES}	PWM Resolution	1 / Fc	–	–	ns	Minimum pulse width of PWM Output

(table continues...)

Table 31 (continued) TCPWM specifications

Spec ID#	Parameter	Description	Min	Typ	Max	Unit	Details/ Conditions
SID.TCPWM.5C	Q_{RES}	Quadrature inputs resolution	2 / Fc	–	–	ns	Minimum pulse width between Quadrature phase inputs. Delays from pins should be similar.

Table 32 Serial communication block (SCB) specifications

Spec ID#	Parameter	Description	Min	Typ	Max	Unit	Details/ Conditions
Fixed I2C DC specifications							
SID149	I_{I^2C1}	Block current consumption at 100 kHz	–	–	30	µA	–
SID150	I_{I^2C2}	Block current consumption at 400 kHz	–	–	80	µA	–
SID151	I_{I^2C3}	Block current consumption at 1 Mbps	–	–	180	µA	–
SID152	I_{I^2C4}	I^2C enabled in Deep Sleep mode	–	–	1.7	µA	At 60°C
Fixed I2C AC specifications							
SID153	F_{I^2C1}	Bit Rate	–	–	1	Mbps	–
Fixed UART DC specifications							
SID160	I_{UART1}	Block current consumption at 100 kbps	–	–	30	µA	–
SID161	I_{UART2}	Block current consumption at 1000 kbps	–	–	180	µA	–

(table continues...)

Table 32 (continued) Serial communication block (SCB) specifications

Spec ID#	Parameter	Description	Min	Typ	Max	Unit	Details/ Conditions
Fixed UART AC specifications							
SID162A	F_{UART1}	Bit Rate	–	–	3	Mbps	ULP Mode
SID162B	F_{UART2}		–	–	8		LP Mode
Fixed SPI DC specifications							
SID163	I_{SPI1}	Block current consumption at 1 Mbps	–	–	220	µA	–
SID164	I_{SPI2}	Block current consumption at 4 Mbps	–	–	340	µA	–
SID165	I_{SPI3}	Block current consumption at 8 Mbps	–	–	360	µA	–
SID165A	I_{SP14}	Block current consumption at 25 Mbps	–	–	800	µA	–
Fixed SPI AC specifications for LP Mode (1.1 V) unless noted otherwise							
SID166	F_{SPI}	SPI Operating Frequency Master and Externally Clocked Slave	–	–	25	MHz	14-MHz max for ULP (0.9 V) mode
SID166A	F_{SPI_IC}	SPI Slave Internally Clocked	–	–	15	MHz	5-MHz max for ULP (0.9 V) mode
SID166B	F_{SPI_EXT}	SPI Operating Frequency Master (F_{SCB} is SPI Clock)	–	–	$F_{SCB}/4$	MHz	F_{SCB} max is 100 MHz in LP mode, 25 MHz max in ULP mode
Fixed SPI Master mode AC specifications for LP Mode (1.1 V) unless noted otherwise							
SID167	T_{DMO}	MOSI Valid after SClock driving edge	–	–	12	ns	20-ns max for ULP (0.9 V) mode

(table continues...)

Table 32 (continued) Serial communication block (SCB) specifications

Spec ID#	Parameter	Description	Min	Typ	Max	Unit	Details/ Conditions
SID168	T_{DSI}	MISO Valid before SClock capturing edge	5	–	–	ns	Full clock, late MISO sampling
SID169	T_{HMO}	MOSI data hold time	0	–	–	ns	Referred to Slave capturing edge
SID169A	$T_{SSELMSCK1}$	SSEL Valid to first SCK Valid edge	18	–	–	ns	Referred to Master clock edge
SID169B	$T_{SSELMSCK2}$	SSEL Hold after last SCK Valid edge	18	–	–	ns	Referred to Master clock edge
Fixed SPI Slave mode AC specifications for LP Mode (1.1 V) unless noted otherwise							
SID170	T_{DMI}	MOSI Valid before Sclock Capturing edge	5	–	–	ns	–
SID171A	T_{DSO_EXT}	MISO Valid after Sclock driving edge in Ext. Clk. mode	–	–	20	ns	35-ns max. for ULP (0.9 V) mode
SID171	T_{DSO}	MISO Valid after Sclock driving edge in Internally Clk. Mode	–	–	T_{DSO_EXT} + 3 × Tscb	ns	Tscb is Serial Comm. Block clock period.
SID171B	T_{DSO}	MISO Valid after Sclock driving edge in Internally Clk. Mode with Median filter enabled.	–	–	T_{DSO_EXT} + 4 × Tscb	ns	Tscb is Serial Comm. Block clock period.
SID172	T_{HSO}	Previous MISO data hold time	5	–	–	ns	–

(table continues...)

Table 32 (continued) Serial communication block (SCB) specifications

Spec ID#	Parameter	Description	Min	Typ	Max	Unit	Details/ Conditions
SID172A	$TSSEL_{SCK1}$	SSEL Valid to first SCK Valid edge	65	–	–	ns	–
SID172B	$TSSEL_{SCK2}$	SSEL Hold after Last SCK Valid edge	65	–	–	ns	

6.4.1 LCD specifications

Table 33 LCD direct drive DC specifications

Spec ID#	Parameter	Description	Min	Typ	Max	Unit	Details/ Conditions
SID154	I_{LCDLOW}	Operating current in low-power mode	–	5	–	µA	16 × 4 small segment display at 50 Hz
SID155	C_{LCDCAP}	LCD capacitance per segment/ common driver	–	500	5000	pF	–
SID156	LCD_{OFFSET}	Long-term segment offset	–	20	–	mV	–
SID157	I_{LCDOP1}	PWM Mode current. 3.3-V bias. 8-MHz IMO. 25°C.	–	0.6	–	mA	32 × 4 segments 50 Hz
SID158	I_{LCDOP2}	PWM Mode current. 3.3-V bias. 8-MHz IMO. 25°C.	–	0.5	–	mA	32 × 4 segments50 Hz

Table 34 LCD direct drive AC specifications

Spec ID#	Parameter	Description	Min	Typ	Max	Unit	Details/ Conditions
SID159	F_{LCD}	LCD frame rate	10	50	150	Hz	–

6.5 Memory

6.5.1 Flash

Table 35 Flash DC specifications[1)]

Spec ID#	Parameter	Description	Min	Typ	Max	Unit	Details/ Conditions
SID173A	I_{PE}	Erase and program current	–	–	6	mA	–

1) It can take as much as 16 milliseconds to write to flash. During this time, the device should not be reset, or flash operations will be interrupted and cannot be relied on to have completed. Reset sources include the XRES pin, software resets, CPU lockup states and privilege violations, improper power supply levels, and watchdogs. Make certain that these are not inadvertently activated.

Table 36 Flash AC specifications

Spec ID#	Parameter	Description	Min	Typ	Max	Unit	Details/ Conditions
SID174	$T_{ROWWRITE}$	Row write time (erase & program)	–	–	16	ms	Row = 512 bytes
SID175	$T_{ROWERASE}$	Row erase time	–	–	11	ms	–
SID176	$T_{ROWPROGRAM}$	Row program time after erase	–	–	5	ms	–
SID178	$T_{BULKERASE}$	Bulk erase time (1024 KB)	–	–	11	ms	–
SID179	$T_{SECTORERASE}$	Sector erase time (256 KB)	–	–	11	ms	512 rows per sector
SID178S	$T_{SSERIAE}$	Subsector erase time	–	–	11	ms	8 rows per subsector
SID179S	$T_{SSWRITE}$	Subsector write time; 1 erase plus 8 program times	–	–	51	ms	–
SID180S	T_{SWRITE}	Sector write time; 1 erase plus 512 program times	–	–	2.6	seconds	–

(table continues...)

Table 36 (continued) Flash AC specifications

Spec ID#	Parameter	Description	Min	Typ	Max	Unit	Details/ Conditions
SID180	$T_{DEVPROG}$	Total device write time	–	–	15	seconds	–
SID181	F_{END}	Flash Endurance	100 k	–	–	cycles	–
SID182	F_{RET1}	Flash Retention. $T_A \leq 25°C$, 100 k P/E cycles	10	–	–	years	–
SID182A	F_{RET2}	Flash Retention. $T_A \leq 85°C$, 10 k P/E cycles	10	–	–	years	–
SID182B	F_{RET3}	Flash Retention. $T_A \leq 55°C$, 20 k P/E cycles	20	–	–	years	–
SID256	T_{WS100}	Number of Wait states at 100 MHz	3	–	–		–
SID257	T_{WS50}	Number of Wait states at 50 MHz	2	–	–		–

6.6 System resources

6.6.1 Power-on-reset

Table 37 Power-on-reset (POR) with brown-out detect (BOD) DC specifications

Spec ID#	Parameter	Description	Min	Typ	Max	Unit	Details/ Conditions
SID190	$V_{FALLPPOR}$	BOD trip voltage in system LP and ULP modes.	1.54	–	–	V	Reset guaranteed for V_{DDD} levels below 1.54 V
SID192	$V_{FALLDPSLP}$	BOD trip voltage in system Deep Sleep mode.	1.54	–	–	V	

Table 38 POR with BOD AC specifications

Spec ID#	Parameter	Description	Min	Typ	Max	Unit	Details/ Conditions
SID192A	V_{DDRAMP}	Maximum power supply ramp rate (any supply)	–	–	100	mV/µs	System LP mode
SID194A	V_{DDRAMP_DS}	Maximum power supply ramp rate (any supply) in system Deep Sleep mode	–	–	10	mV/µs	BOD operation guaranteed

6.6.2 Voltage monitors

Table 39 Voltage monitors DC specifications

Spec ID#	Parameter	Description	Min	Typ	Max	Unit	Details/ Conditions
SID195R	V_{HVD0}		1.18	1.23	1.27	V	–
SID195	V_{HVDI1}		1.38	1.43	1.47	V	–
SID196	V_{HVDI2}		1.57	1.63	1.68	V	–
SID197	V_{HVDI3}		1.76	1.83	1.89	V	–
SID198	V_{HVDI4}		1.95	2.03	2.1	V	–
SID199	V_{HVDI5}		2.05	2.13	2.2	V	–
SID200	V_{HVDI6}		2.15	2.23	2.3	V	–
SID201	V_{HVDI7}		2.24	2.33	2.41	V	–
SID202	V_{HVDI8}		2.34	2.43	2.51	V	–
SID203	V_{HVDI9}		2.44	2.53	2.61	V	–
SID204	V_{HVDI10}		2.53	2.63	2.72	V	–
SID205	V_{HVDI11}		2.63	2.73	2.82	V	–
SID206	V_{HVDI12}		2.73	2.83	2.92	V	–
SID207	V_{HVDI13}		2.82	2.93	3.03	V	–
SID208	V_{HVDI14}		2.92	3.03	3.13	V	–
SID209	V_{HVDI15}		3.02	3.13	3.23	V	–
SID211	LVI_IDD	Block current	–	5	15	µA	–

Table 40 Voltage Monitors AC specification

Spec ID#	Parameter	Description	Min	Typ	Max	Unit	Details/ Conditions
SID212	$T_{MONTRIP}$	Voltage monitor trip time	–	–	170	ns	–

6.6.3 SWD and Trace interface

Table 41 SWD and Trace specifications

Spec ID#	Parameter	Description	Min	Typ	Max	Unit	Details/ Conditions
SID214	F_SWDCLK2	1.7 V ≤ V_{DDD} ≤ 3.6 V	–	–	25	MHz	LP mode. V_{CCD} = 1.1 V
SID214L	F_SWDCLK2L	1.7 V ≤ V_{DDD} ≤ 3.6 V	–	–	12	MHz	ULP mode. V_{CCD} = 0.9 V
SID215	T_SWDI_SETUP	T = 1/f SWDCLK	0.25 * T	–	–	ns	–
SID216	T_SWDI_HOLD	T = 1/f SWDCLK	0.25 * T	–	–	ns	–
SID217	T_SWDO_VALID	T = 1/f SWDCLK	–	–	0.5 * T	ns	–
SID217A	T_SWDO_HOLD	T = 1/f SWDCLK	1	–	–	ns	–
SID214T	F_TRCLK_LP1	With Trace Data setup/ hold times of 2/1 ns respectively	–	–	75	MHz	LP Mode. V_{DD} = 1.1 V
SID215T	F_TRCLK_LP2	With Trace Data setup/ hold times of 3/2 ns respectively	–	–	70	MHz	LP Mode. V_{DD} = 1.1 V
SID216T	F_TRCLK_ULP	With Trace Data setup/ hold times of 3/2 ns respectively	–	–	25	MHz	ULP Mode. V_{DD} = 0.9 V

6.6.4 Internal Main Oscillator

Table 42 IMO DC specifications

Spec ID#	Parameter	Description	Min	Typ	Max	Unit	Details/ Conditions
SID218	I_{IMO1}	IMO operating current at 8 MHz	–	9	15	µA	–

Table 43 IMO AC specifications

Spec ID#	Parameter	Description	Min	Typ	Max	Unit	Details/ Conditions
SID223	$F_{IMOTOL1}$	Frequency variation centered on 8 MHz	–	–	±2	%	–
SID227	T_{JITR}	Cycle-to-Cycle and Period jitter	–	±250	–	ps	–

6.6.5 Internal Low-Speed Oscillator

Table 44 ILO DC specification

Spec ID#	Parameter	Description	Min	Typ	Max	Unit	Details/ Conditions
SID231	I_{ILO2}	ILO operating current at 32 kHz	–	0.3	0.7	µA	–

Table 45 ILO AC specifications

Spec ID#	Parameter	Description	Min	Typ	Max	Unit	Details/ Conditions
SID234	$T_{STARTILO1}$	ILO startup time	–	–	7	µs	Startup time to 95% of final frequency
SID236	$T_{LIODUTY}$	ILO Duty cycle	45	50	55	%	–
SID237	$F_{ILOTRIM1}$	ILO frequency	28.8	32	36.1	kHz	Factory trimmed

6.6.6 Crystal oscillator

Table 46 ECO Specifications

Spec ID#	Parameter	Description	Min	Typ	Max	Unit	Details/ Conditions
MHz ECO DC Specifications							
SID316	I_{DD_MHz}	Block operating current with Cload up to 18 pF	–	800	1600	µA	Max = 35 MHz, Typ = 16 MHz
MHz ECO AC Specifications							
SID317	F_MHz	Crystal frequency range	16	–	35	MHz	–
kHz ECO DC Specification							
SID318	I_{DD_kHz}	Block operating current with 32-kHz crystal	–	0.38	1	µA	–
SID321E	ESR32K	Equivalent Series Resistance	–	80	–	kΩ	–
SID322E	PD32K	Drive level	–	–	1	µW	–
kHz ECO AC Specification							
SID319	F_kHz	32-kHz frequency	–	32.768	–	kHz	–
SID320	Ton_kHz	Startup time	–	–	500	ms	–
SID320E	F_{TOL32K}	Frequency tolerance	–	50	250	ppm	–

6.6.7 External clock

Table 47 External clock specifications

Spec ID#	Parameter	Description	Min	Typ	Max	Unit	Details/ Conditions
SID305	$EXTCLK_{FREQ}$	External Clock input Frequency	0	–	100	MHz	–

(table continues...)

Table 47 (continued) External clock specifications

Spec ID#	Parameter	Description	Min	Typ	Max	Unit	Details/ Conditions
SID306	$EXTCLK_{DUTY}$	Duty cycle; Measured at $V_{DD/2}$	45	–	55	%	–

6.6.8 PLL

Table 48 PLL Specifications

Spec ID#	Parameter	Description	Min	Typ	Max	Unit	Details/ Conditions
SID304P	PLL_IN	Input frequency to PLL block	4	–	64	MHz	
SID305P	PLL_LOCK	Time to achieve PLL Lock	–	16	35	µs	–
SID306P	PLL_OUT	Output frequency from PLL Block	10.625	–	150	MHz	–
SID307P	PLL_IDD	PLL Current	–	0.55	1.1	mA	Typ at 100 MHz out.
SID308P	PLL_JTR	Period Jitter	–	–	150	ps	100-MHz output frequency

6.6.9 Clock source switching time

Table 49 Clock source switching time specifications

Spec ID#	Parameter	Description	Min	Typ	Max	Unit	Details/ Conditions
SID262	$TCLK_{SWITCH}$	Clock switching from clk1 to clk2 in clock periods[1)]	–	–	4 clk1 + 3 clk2	periods	–

1) As an example, if the clk_path[1] source is changed from the IMO to the FLL (see Figure 4) then clk1 is the IMO and clk2 is the FLL.

6.6.10 FLL

Table 50 Frequency Locked Loop (FLL) Specifications

Spec ID#	Parameter	Description	Min	Typ	Max	Unit	Details/ Conditions
SID450	FLL_RANGE	Input frequency range.	0.001	–	100	MHz	Lower limit allows lock to USB SOF signal (1 kHz). Upper limit is for External input.
SID451	FLL_OUT_DIV2	Output frequency range. V_{CCD} = 1.1 V	24.00	–	100.00	MHz	Output range of FLL divided-by-2 output
SID451A	FLL_OUT_DIV2	Output frequency range. V_{CCD} = 0.9 V	24.00	–	50.00	MHz	Output range of FLL divided-by-2 output
SID452	FLL_DUTY_DIV2	Divided-by-2 output; High or Low	47.00	–	53.00	%	–
SID454	FLL_WAKEUP	Time from stable input clock to 1% of final value on deep sleep wakeup	–	–	7.50	µs	With IMO input, less than 10°C change in temperature while in Deep Sleep, and Fout ≥ 50 MHz.
SID455	FLL_JITTER	Period jitter (1 sigma at 100 MHz)	–	–	35.00	ps	50 ps at 48 MHz, 35 ps at 100 MHz
SID456	FLL_CURRENT	CCO + Logic current	–	–	5.50	µA/MHz	–

6.6.11 UDB

Table 51 UDB AC specifications

Spec ID#	Parameter	Description	Min	Typ	Max	Unit	Details/ Conditions
Data path performance							

(table continues...)

Table 51 (continued) UDB AC specifications

Spec ID#	Parameter	Description	Min	Typ	Max	Unit	Details/ Conditions
SID249	$F_{MAX-TIMER}$	Max frequency of 16-bit timer in a UDB pair	–	–	100	MHz	–
SID250	$F_{MAX-ADDER}$	Max frequency of 16-bit adder in a UDB pair	–	–	100	MHz	–
SID251	F_{MAX_CRC}	Max frequency of 16-bit CRC/PRS in a UDB pair	–	–	100	MHz	–
PLD performance in UDB							
SID252	F_{MAX_PLD}	Max frequency of 2-pass PLD function in a UDB pair	–	–	100	MHz	–
Clock to output performance							
SID253	$T_{CLK_OUT_UDB1}$	Prop. delay for clock in to data out	–	5	–	ns	–
UDB port adapter specifications conditions: 10-pF load, 3-V VDDIO and VDDD							
SID263	T_{LCLKDO}	LCLK to Output delay	–	–	11	ns	LCLK is a selected clock; for more information see the TRM
SID264	$T_{DINLCLK}$	Input setup time to LCLK rising edge	–	–	7	ns	–
SID265	$T_{DINLCLKHLD}$	Input hold time from LCLK rising edge	5	–	–	ns	–

(table continues...)

Table 51 (continued) UDB AC specifications

Spec ID#	Parameter	Description	Min	Typ	Max	Unit	Details/ Conditions
SID266	$T_{LCLKHIZ}$	LCLK to Output tristated	–	–	28	ns	–
SID267	T_{FLCLK}	LCLK frequency	–	–	33	MHz	–
SID268	$T_{LCLKDUTY}$	LCLK duty cycle (percentage high)	40%	–	60%	%	–

6.6.12 USB

Table 52 USB specifications (USB requires LP Mode 1.1-V internal supply)

Spec ID#	Parameter	Description	Min	Typ	Max	Unit	Details/ Conditions
USB block specifications							
SID322U	Vusb_3.3	Device supply for USB operation	3.15	–	3.6	V	USB Configured
SID323U	Vusb_3	Device supply for USB operation (functional operation only)	2.85	–	3.6	V	USB Configured
SID325U	Iusb_config	Block supply current in Active mode	–	8	–	mA	V_{DDD} = 3.3 V
SID328	Iusb_suspend	Block supply current in suspend mode	–	0.5	–	mA	V_{DDD} = 3.3 V, Device connected
SID329	Iusb_suspend	Block supply current in suspend mode	–	0.3	–	mA	V_{DDD} = 3.3 V, Device disconnected

(table continues...)

Table 52 (continued) USB specifications (USB requires LP Mode 1.1-V internal supply)

Spec ID#	Parameter	Description	Min	Typ	Max	Unit	Details/ Conditions
SID330U	USB_Drive_Res	USB driver impedance	28	–	44	Ω	Series resistors are on chip
SID331U	USB_Pulldown	USB pull-down resistors in Host mode	14.25	–	24.8	kΩ	–
SID332U	USB_Pullup_Idle	Idle mode range	900	–	1575	Ω	Bus idle
SID333U	USB_Pullup	Active mode	1425	–	3090	Ω	Upstream device transmitting

6.6.13 QSPI

Table 53 QSPI specifications

Spec ID#	Parameter	Description	Min	Typ	Max	Unit	Details/ Conditions
SMIF QSPI specifications. All specs with 15-pF load.							
SID390Q	Fsmifclock	SMIF QSPI output clock frequency	–	–	80	MHz	LP mode (1.1 V)
SID390QU	Fsmifclocku	SMIF QSPI output clock frequency	–	–	50	MHz	ULP mode (0.9 V). Guaranteed by Char.
SID397Q	Idd_qspi	Block current in LP mode (1.1 V)	–	–	1900	µA	LP mode (1.1 V)
SID398Q	Idd_qspi_u	Block current in ULP mode (0.9 V)	–	–	590	µA	ULP mode (0.9 V)
SID391Q	Tsetup	Input data set-up time with respect to clock capturing edge	4.5	–	–	ns	–

(table continues...)

Table 53 (continued) QSPI specifications

Spec ID#	Parameter	Description	Min	Typ	Max	Unit	Details/ Conditions
SID392Q	Tdatahold	Input data hold time with respect to clock capturing edge	0	–	–	ns	–
SID393Q	Tdataoutvalid	Output data valid time with respect to clock falling edge	–	–	3.7	ns	7.5-ns max for ULP mode (0.9 V)
SID394Q	Tholdtime	Output data hold time with respect to clock rising edge	3	–	–	ns	–
SID395Q	Tseloutvalid	Output Select valid time with respect to clock rising edge	–	–	7.5	ns	15-ns max for ULP mode (0.9 V)
SID396Q	Tselouthold	Output Select hold time with respect to clock rising edge	0.5*Tsclk	–	–	ns	Tsclk = Fsmifclk cycle time

6.6.14 Audio subsystem

Table 54 Audio subsystem specifications

Spec ID#	Parameter	Description	Min	Typ	Max	Unit	Details/ Conditions
PDM specifications							
SID400P	PDM_IDD1	PDM Active current, Stereo operation, 1-MHz clock	–	175	–	µA	16-bit audio at 16 ksps

(table continues...)

Table 54 (continued) Audio subsystem specifications

Spec ID#	Parameter	Description	Min	Typ	Max	Unit	Details/ Conditions
SID401	PDM_IDD2	PDM Active current, Stereo operation, 3-MHz clock	–	600	–	µA	24-bit audio at 48 ksps
SID402[1)]	PDM_JITTER	RMS Jitter in PDM clock	–200	–	200	ps	–
SID403[1)]	PDM_CLK	PDM Clock speed	0.384	–	3.072	MHz	–
SID403A[1)]	PDM_BLK_CLK	PDM Block input clock	1.024	–	49.152	MHz	–
SID403B[1)]	PDM_SETUP	Data input set-up time to PDM_CLK edge	10	–	–	ns	–
SID403C[1)]	PDM_HOLD	Data input hold time to PDM_CLK edge	10	–	–	ns	–
SID404[1)]	PDM_OUT	Audio sample rate	8	–	48	ksps	–
SID405[1)]	PDM_WL	Word Length	16	–	24	bits	–
SID406[1)]	PDM_SNR	Signal-to-Noise Ratio (A-weighted)	–	100	–	dB	PDM input, 20 Hz to 20 kHz BW
SID407[1)]	PDM_DR	Dynamic Range (A-weighted)	–	100	–	dB	20 Hz to 20 kHz BW, –60 dB FS
SID408[1)]	PDM_FR	Frequency Response	–0.2	–	0.2	dB	DC to 0.45f. DC Blocking filter off.
SID409[1)]	PDM_SB	Stop Band	–	0.566	–	f	–
SID410[1)]	PDM_SBA	Stop Band Attenuation	–	60	–	dB	–
SID411[1)]	PDM_GAIN	Adjustable Gain	–12	–	10.5	dB	PDM to PCM, 1.5 dB/step

(table continues...)

Table 54 (continued) Audio subsystem specifications

Spec ID#	Parameter	Description	Min	Typ	Max	Unit	Details/ Conditions
SID412[1)]	PDM_ST	Startup time	–	48	–	WS (Word Select) cycles	
I2S specifications. The same for LP and ULP modes unless stated otherwise.							
SID415	I2S_IDD	Block current	–	400	–	µA	
SID413	I2S_WORD	Length of I2S Word	8	–	32	bits	–
SID414	I2S_WS	Word Clock frequency in LP mode	–	–	192	kHz	12.288-MHz bit clock with 32-bit word
SID414M	I2S_WS_U	Word Clock frequency in ULP mode	–	–	48	kHz	3.072-MHz bit clock with 32-bit word
SID414A	I2S_WS_TDM	Word Clock frequency in TDM mode for LP	–	–	48	kHz	Eight 32-bit channels
SID414X	I2S_WS_TDM_U	Word Clock frequency in TDM mode for ULP	–	–	12	kHz	Eight 32-bit channels
I2S Slave Mode							
SID430	TS_WS	WS Setup Time to the Following Rising Edge of SCK for LP Mode	5	–	–	ns	–
SID430U	TS_WS	WS Setup Time to the Following Rising Edge of SCK for ULP Mode	11	–	–	ns	–
SID430A	TH_WS	WS Hold Time to the Following Edge of SCK	TMCLK_SOC[2)] + 5	–	–	ns	–

(table continues...)

Table 54 (continued) Audio subsystem specifications

Spec ID#	Parameter	Description	Min	Typ	Max	Unit	Details/ Conditions
SID432	TD_SDO	Delay Time of TX_SDO Transition from Edge of TX_SCK for LP mode	– (TMCLK_SOC + 25)	–	TMCLK_SOC + 25	ns	Associated clock edge depends on selected polarity
SID432U	TD_SDO	Delay Time of TX_SDO Transition from Edge of TX_SCK for ULP mode	– (TMCLK_SOC +70)	–	TMCLK_SOC + 70	ns	Associated clock edge depends on selected polarity
SID433	TS_SDI	RX_SDI Setup Time to the Following Edge of RX_SCK in Lp Mode	5	–	–	ns	–
SID433U	TS_SDI	RX_SDI Setup Time to the Following Edge of RX_SCK in ULP mode	11	–	–	ns	–
SID434	TH_SDI	RX_SDI Hold Time to the Rising Edge of RX_SCK	TMCLK_SOC + 5	–	–	ns	–
SID435	TSCKCY	TX/RX_SCK Bit Clock Duty Cycle	45	–	55	%	–
I2S Master Mode							
SID437	TD_WS	WS Transition Delay from Falling Edge of SCK in LP mode	–10	–	20	ns	–

(table continues...)

Table 54 (continued) Audio subsystem specifications

Spec ID#	Parameter	Description	Min	Typ	Max	Unit	Details/ Conditions
SID437U	TD_WS_U	WS Transition Delay from Falling Edge of SCK in ULP mode	–10	–	40	ns	–
SID438	TD_SDO	SDO Transition Delay from Falling Edge of SCK in LP mode	–10	–	20	ns	–
SID438U	TD_SDO	SDO Transition Delay from Falling Edge of SCK in ULP mode	–10	–	40	ns	–
SID439	TS_SDI	SDI Setup Time to the Associated Edge of SCK	5	–	–	ns	Associated clock edge depends on selected polarity
SID440	TH_SDI	SDI Hold Time to the Associated Edge of SCK	TMCLK_SOC + 5	–	–	ns	T is TX/ RX_SCK Bit Clock period. Associated clock edge depends on selected polarity.
SID443	TSCKCY	SCK Bit Clock Duty Cycle	45	–	55	%	–
SID445	FMCLK_SOC	MCLK_SOC Frequency in LP mode	1.024	–	98.304	MHz	FMCLK_SOC = 8 * Bit-clock
SID445U	FMCLK_SOC _U	MCLK_SOC Frequency in ULP mode	1.024	–	24.576	MHz	FMCLK_SOC _U = 8 * Bit-clock

(table continues...)

Table 54 (continued) Audio subsystem specifications

Spec ID#	Parameter	Description	Min	Typ	Max	Unit	Details/ Conditions
SID446	TMCLKCY	MCLK_SOC Duty Cycle	45	–	55	%	–
SID447	TJITTER	MCLK_SOC Input Jitter	–100	–	100	ps	–

1) Guaranteed by design, not production tested.
2) TMCLK_SOC is the internal I2S master clock period.

6.6.15 Smart I/O

Table 55 Smart I/O specifications

Spec ID#	Parameter	Description	Min	Typ	Max	Unit	Details/ Conditions
SID420	SMIO_BYP	Smart I/O Bypass delay	–	–	2	ns	–
SID421	SMIO_LUT	Smart I/O LUT prop delay	–	8	–	ns	–

6.6.16 Precision ILO (PILO)

Table 56 PILO specifications

Spec ID#	Parameter	Description	Min	Typ	Max	Unit	Details/ Conditions
SID 430R	I_{PILO}	Operating current	–	1.2	4	µA	–
SID431	F_PILO	PILO nominal frequency	–	32768	–	Hz	T = 25°C
SID432R	ACC_PILO	PILO accuracy with periodic calibration	–500	–	500	ppm	–

6.6.17 JTAG Boundary Scan

Table 57 JTAG Boundary Scan

Spec ID#		Parameter	Description	Min	Typ	Max	Units
JTAG Boundary Scan Parameters							
JTAG Boundary Scan Parameters for 1.1 V (LP) Mode Operation:							
SID468	TCKLOW	TCK LOW	52	–	–	ns	–
SID469	TCKHIGH	TCK HIGH	10	–	–	ns	–
SID470	TCK_TDO	TCK falling edge to output valid		–	40	ns	–
SID471	TSU_TCK	Input valid to TCK rising edge	12	–	–	ns	–
SID472	TCk_THD	Input hold time to TCK rising edge	10	–	–	ns	–
SID473	TCK_TDOV	TCK falling edge to output valid (High-Z to Active).	40	–	–	ns	–
SID474	TCK_TDOZ	TCK falling edge to output valid (Active to High-Z).	40	–	–	ns	–
JTAG Boundary Scan Parameters for 0.9 V (ULP) Mode Operation:							
SID468A	TCKLOW	TCK low	102	–	–	ns	–
SID469A	TCKHIGH	TCK high	20	–	–	ns	–
SID470A	TCK_TDO	TCK falling edge to output valid		–	80	ns	–
SID471A	TSU_TCK	Input valid to TCK rising edge	22	–	–	ns	–
SID472A	TCk_THD	Input hold time to TCK rising edge	20	–	–	ns	–
SID473A	TCK_TDOV	TCK falling edge to output valid (high-Z to active).	80	–	–	ns	–

(table continues...)

Table 57 (continued) JTAG Boundary Scan

Spec ID#		Parameter	Description	Min	Typ	Max	Units
SID474A	TCK_TDOZ	TCK falling edge to output valid (active to high-Z).	80	–	–	ns	–

6.7 Bluetooth® LE

Table 58 Bluetooth® LE Subsystem Specifications

Spec ID#	Parameter	Description	Min	Typ	Max	Unit	Details/ Conditions
RF Receiver Specifications (1 Mbps)							
SID317R	RXS,IDLE	RX Sensitivity with Ideal Transmitter	–	–95	–	dBm	Across RF Operating Frequency Range
SID317RR	RXS,IDLE	RX Sensitivity with Ideal Transmitter	–	–93	–	dBm	255-byte packet length, across Frequency Range
SID318R	RXS,DIRTY	RX Sensitivity with Dirty Transmitter	–	–92	–	dBm	RF-PHY Specificatio n (RCV-LE/CA/01/C)
SID319R	PRXMAX	Maximum received signal strength at < 0.1% PER	–	0	–	dBm	RF-PHY Specificatio n (RCV-LE/CA/06/C)
SID320R	CI1	Co-channel interference , Wanted Signal at –67 dBm and Interferer at FRX	–	9	21	dB	RF-PHY Specificatio n (RCV-LE/CA/03/C)

(table continues...)

Table 58 (continued) Bluetooth® LE Subsystem Specifications

Spec ID#	Parameter	Description	Min	Typ	Max	Unit	Details/ Conditions
SID321R	CI2	Adjacent channel interference Wanted Signal at –67 dBm and Interferer at FRX ± 1 MHz	–	3	15	dB	RF-PHY Specification (RCV-LE/CA/03/C)
SID322R	CI3	Adjacent channel interference Wanted Signal at –67 dBm and Interferer at FRX ± 2 MHz	–	–26	–17	dB	RF-PHY Specification (RCV-LE/CA/03/C)
SID323R	CI4	Adjacent channel interference Wanted Signal at –67 dBm and Interferer at ≥ FRX ± 3 MHz	–	–33	–27	dB	RF-PHY Specification (RCV-LE/CA/03/C)
SID324R	CI5	Adjacent channel interference Wanted Signal at –67 dBm and Interferer at Image frequency (FIMAGE)	–	–20	–9	dB	RF-PHY Specification (RCV-LE/CA/03/C)

(table continues...)

Table 58 (continued) Bluetooth® LE Subsystem Specifications

Spec ID#	Parameter	Description	Min	Typ	Max	Unit	Details/ Conditions
SID325R	CI6	Adjacent channel interference Wanted Signal at –67 dBm and Interferer at Image frequency (FIMAGE ± 1 MHz)	–	–28	–15	dB	RF-PHY Specification (RCV-LE/CA/03/C)
RF Receiver Specifications (2 Mbps)							
SID326	RXS,IDLE	RX Sensitivity with Ideal Transmitter	–	–92	–	dBm	Across RF Operating Frequency Range
SID326R	RXS,IDLE	RX Sensitivity with Ideal Transmitter	–	–90	–	dBm	255-byte packet length, across Frequency Range
SID327	RXS,DIRTY	RX Sensitivity with Dirty Transmitter	–	–89	–	dBm	RF-PHY Specification (RCV-LE/CA/01/C)
SID328R	PRXMAX	Maximum received signal strength at < 0.1% PER	–	0	–	dBm	RF-PHY Specification (RCV-LE/CA/06/C)
SID329R	CI1	Co-channel interference, Wanted Signal at –67 dBm and Interferer at FRX	–	9	21	dB	RF-PHY Specification (RCV-LE/CA/03/C)

(table continues...)

Table 58 (continued) Bluetooth® LE Subsystem Specifications

Spec ID#	Parameter	Description	Min	Typ	Max	Unit	Details/ Conditions
SID330	CI2	Adjacent channel interference Wanted Signal at –67 dBm and Interferer at FRX ± 2 MHz	–	3	15	dB	RF-PHY Specification (RCV-LE/CA/03/C)
SID331	CI3	Adjacent channel interference Wanted Signal at –67 dBm and Interferer at FRX ± 4 MHz	–	–26	–17	dB	RF-PHY Specification (RCV-LE/CA/03/C)
SID332	CI4	Adjacent channel interference Wanted Signal at –67 dBm and Interferer at ≥ FRX ± 6 MHz	–	–33	–27	dB	RF-PHY Specification (RCV-LE/CA/03/C)
SID333	CI5	Adjacent channel interference Wanted Signal at –67 dBm and Interferer at Image frequency (FIMAGE)	–	–20	–9	dB	RF-PHY Specification (RCV-LE/CA/03/C)

(table continues...)

Table 58 (continued) Bluetooth® LE Subsystem Specifications

Spec ID#	Parameter	Description	Min	Typ	Max	Unit	Details/ Conditions
SID334	CI6	Adjacent channel interference Wanted Signal at –67 dBm and Interferer at Image frequency (FIMAGE ± 2MHz)	–	–28	–15	dB	RF-PHY Specification (RCV-LE/CA/03/C)
RF Receiver Specification (1 & 2 Mbps)							
SID338	OBB1	Out of Band Blocking Wanted Signal at –67 dBm and Interferer at F = 30–2000 MHz	–30	–27	–	dBm	RF-PHY Specification (RCV-LE/CA/04/C)
SID339	OBB2	Out of Band Blocking Wanted Signal at –67 dBm and Interferer at F = 2003–2399 MHz	–35	–27	–	dBm	RF-PHY Specification (RCV-LE/CA/04/C)
SID340	OBB3	Out of Band Blocking, Wanted Signal at –67 dBm and Interferer at F= 2484–2997MHz	–35	–27	–	dBm	RF-PHY Specification (RCV-LE/CA/04/C)

(table continues...)

Table 58 (continued) Bluetooth® LE Subsystem Specifications

Spec ID#	Parameter	Description	Min	Typ	Max	Unit	Details/ Conditions
SID341	OBB4	Out of Band Blocking Wanted Signal at –67 dBm and Interferer at F= 3000–12750 MHz	–30	–27	–	dBm	RF-PHY Specification (RCV-LE/CA/04/C)
SID342	IMD	Intermodulation Performance Wanted Signal at –64 dBm and 1 Mbps Bluetooth® LE, 3rd, 4th, and 5th offset channel	–50	–	–	dBm	RF-PHY Specification (RCV-LE/CA/05/C)
SID343	RXSE1	Receiver Spurious emission 30 MHz to 1.0 GHz	–	–	–57	dBm	100-kHz measurement bandwidth ETSI EN300 328 V2.1.1
SID344	RXSE2	Receiver Spurious emission 1.0 GHz to 12.75 GHz	–	–	–53	dBm	1-MHz measurement bandwidth ETSI EN300 328 V2.1.1
RF Transmitter Specifications			–	–	–	–	
SID345	TXP,ACC	RF Power Accuracy	–1	–	1	dB	–
SID346	TXP,RANGE	Frequency Accuracy	–	24	–	dB	–20 dBm to +4 dBm
SID347	TXP,0dBm	Output Power, 0 dB Gain setting	–	0	–	dBm	–

(table continues...)

Table 58 (continued) Bluetooth® LE Subsystem Specifications

Spec ID#	Parameter	Description	Min	Typ	Max	Unit	Details/ Conditions
SID348	TXP,MAX	Output Power, Maximum Power Setting	–	4	–	dBm	–
SID349	TXP,MIN	Output Power, Minimum Power Setting	–	–20	–	dBm	–
SID350	F2AVG	Average Frequency deviation for 10101010 pattern	185	–	–	kHz	RF-PHY Specification (TRM-LE/CA/05/C)
SID350R	F2AVG_2M	Average Frequency deviation for 10101010 pattern for 2 Mbps	370	–	–	kHz	RF-PHY Specification (TRM-LE/CA/05/C)
SID351	F1AVG	Average Frequency deviation for 11110000 pattern	225	250	275	kHz	RF-PHY Specification (TRM-LE/CA/05/C)
SID351R	F1AVG_2M	Average Frequency deviation for 11110000 pattern for 2 Mbps	450	500	550	kHz	RF-PHY Specification (TRM-LE/CA/05/C)
SID352	EO	Eye opening = ΔF2AVG/ ΔF1AVG	0.8	–	–	–	RF-PHY Specification (TRM-LE/CA/05/C)
SID353	FTX,ACC	Frequency Accuracy	–150	–	150	kHz	RF-PHY Specification (TRM-LE/CA/06/C)

(table continues...)

Table 58 (continued) Bluetooth® LE Subsystem Specifications

Spec ID#	Parameter	Description	Min	Typ	Max	Unit	Details/ Conditions
SID354	FTX,MAXDR	Maximum Frequency Drift	–50	–	50	kHz	RF-PHY Specification (TRM-LE/CA/06/C)
SID355	FTX,INITDR	Initial Frequency drift	–20	–	20	kHz	RF-PHY Specification (TRM-LE/CA/06/C)
SID356	FTX,DR	Maximum Drift Rate	–20	–	20	kHz/50 µs	RF-PHY Specification (TRM-LE/CA/06/C)
SID357	IBSE1	In Band Spurious Emission at 2 MHz offset (1 Mbps) In Band Spurious Emission at 4 MHz offset (2 Mbps)	–	–	–20	dBm	RF-PHY Specification (TRM-LE/CA/03/C)
SID358	IBSE2	In Band Spurious Emission at ≥ 3 MHz offset (1 Mbps) In Band Spurious Emission at ≥ 6 MHz offset (2 Mbps)	–	–	–30	dBm	RF-PHY Specification (TRM-LE/CA/03/C)
SID359	TXSE1	Transmitter Spurious Emissions (Averaging), < 1.0 GHz	–	–	–55.5	dBm	FCC-15.247
SID360	TXSE2	Transmitter Spurious Emissions (Averaging), > 1.0 GHz			–41.5	dBm	FCC-15.247

(table continues...)

Table 58 (continued) Bluetooth® LE Subsystem Specifications

Spec ID#	Parameter	Description	Min	Typ	Max	Unit	Details/ Conditions
RF Current Specification							
SID361	IRX1_wb	Receive Current (1 Mbps)	–	6.7	–	mA	VDD_NS = V_{DDD} = 3.3 V current with buck
SID362	ITX1_wb_0dBm	TX Current at 0 dBm setting (1 Mbps)	–	5.7	–	mA	VDD_NS = V_{DDD} = 3.3 V current with buck
SID363	IRX1_nb	Receive Current (1 Mbps)	–	11	–	mA	V_{DDD} current without buck
SID364	ITX1_nb_0dBm	TX Current at 0-dBm setting (1 Mbps)	–	10	–	mA	V_{DDD} current without buck
SID365	ITX1_nb_4dBm	TX Current at 4-dBm setting (1 Mbps)	–	13	–	mA	V_{DDD} current without buck
SID365R	ITX1_wb_4dBm	TX Current at 4-dBm setting (1 Mbps)	–	8.5	–	mA	VDD_NS = V_{DDD} = 3.3 V current with buck
SID366	ITX1_nb_20dBm	TX Current at –20-dBm setting (1 Mbps)	–	7	–	mA	V_{DDD} current without buck
SID367	IRX2_wb	Receive Current (2 Mbps)	–	7	–	mA	VDD_NS = V_{DDD} = 3.3 V current with buck
SID368	ITX2_wb_0dBm	TX Current at 0-dBm setting (2 Mbps)	–	5.7	–	mA	VDD_NS = V_{DDD} = 3.3 V current with buck
SID369	IRX2_nb	Receive Current (2 Mbps)	–	11.3	–	mA	V_{DDD} current without buck

(table continues...)

Table 58 (continued) Bluetooth® LE Subsystem Specifications

Spec ID#	Parameter	Description	Min	Typ	Max	Unit	Details/ Conditions
SID370	ITX2_nb_0dBm	TX Current at 0-dBm setting (2 Mbps)	–	10	–	mA	V_{DDD} current without buck
SID371	ITX2_nb_4dBm	TX Current at 4-dBm setting (2 Mbps)	–	13	–	mA	V_{DDD} current without buck
SID371R	ITX2_wb_4dBm	TX Current at 4-dBm setting (2 Mbps)	–	8.5	–	mA	VDD_NS = V_{DDD} = 3.3 V current with buck
SID372	ITX2_nb_20dBm	TX Current at –20-dBm setting (2 Mbps)	–	7	–	mA	V_{DDD} current without buck
General RF Specification							
SID373	FREQ	RF operating frequency	2400	–	2482	MHz	–
SID374	CHBW	Channel spacing	–	2	–	MHz	–
SID375	DR1	On-air Data Rate (1 Mbps)	–	1000	–	kbps	–
SID376	DR2	On-air Data Rate (2 Mbps)	–	2000	–	kbps	–
SID377	TXSUP	Transmitter Startup time	–	80	82	µs	–
SID378	RXSUP	Receiver Startup time	–	80	82	µs	–
RSSI Specification							
SID379	RSSI,ACC	RSSI Accuracy	–4	–	4	dB	–95 dBm to –20 dBm measurement range
SID380	RSSI,RES	RSSI Resolution	–	1	–	dB	–

(table continues...)

Table 58 (continued) Bluetooth® LE Subsystem Specifications

Spec ID#	Parameter	Description	Min	Typ	Max	Unit	Details/ Conditions
SID381	RSSI,PER	RSSI Sample Period	–	6	–	µs	–
System-Level Bluetooth® LE Specifications							
SID433R	Adv_Pwr	1.28s, 32 bytes, 0 dBm	–	42	–	µW	3.3 V, Buck, w/o Deep Sleep current
SID434R	Conn_Pwr_ 300	300 ms, 0 byte, 0 dBm	–	70	–	µW	3.3 V, Buck, w/o Deep Sleep current
SID435R	Conn_Pwr_ 1S	1000 ms, 0 byte, 0 dBm	–	30	–	µW	3.3 V, Buck, w/o Deep Sleep current
SID436R	Conn_Pwr_ 4S	4000 ms, 0 byte, 0 dBm	–	4	–	µW	3.3 V, Buck, w/o Deep Sleep current

Table 59 Bluetooth® LE ECO Specifications

Spec ID#	Parameter	Description	Min	Typ	Max	Unit	Details/ Conditions
16-MHz Crystal Oscillator							
SID382	FXO1	Crystal frequency	–	16	–	MHz	–
SID383	ESR1	Equivalent series resistance	–	100	250	Ω	–
SID384	Txostart1	Startup time	–	400	–	µs	Frequency Stable (16 MHz ±50 ppm)
SID385	IXO1	Operating current	–	300	–	µA	Includes crystal current, LDO and BG
32-MHz Crystal Oscillator							
SID386	FXO2	Crystal frequency	–	32	–	MHz	–

(table continues...)

Table 59 (continued) Bluetooth® LE ECO Specifications

Spec ID#	Parameter	Description	Min	Typ	Max	Unit	Details/ Conditions
SID387	ESR2	Equivalent series resistance	–	50	100	Ω	–
SID388	Txostart2	Startup time	–	400	–	µs	Frequency Stable (32 MHz ±50 ppm)
SID389	IXO2	Operating current	–	350	–	µA	Includes crystal current, LDO and BG
16-MHz and 32-MHz Crystal Oscillator							
SID390	FTOL	Frequency tolerance	–20	–	20	ppm	After trimming, including aging and temp drift
SID391	PD	Drive level	–	–	100	µW	–

7 Ordering information

Table 60 lists the CY8C63x6 and CY8C63x7 part numbers and features. See also the product selector guide.

Table 60 Marketing part numbers

Product[1]	CM4 CPU Speed [LP/ULP] (MHz)	CM0+ CPU Speed [LP/ULP] (MHz)	Single CPU/ Dual CPU	Power Mode	Flash (KB)	SRAM (KB)	Opamp	No. of UDBs	CAPSENSE™	CRYPTO	'Secure Boot'	USB	Audio Subsystem	GPIOs	Package
CY8C6336LQI-BLF02	150/-	–/25	Single	LP	512	128	0	0	–	–	–	–	–	36	68-QFN
CY8C6336LQI-BLF42	150/-	–/25	Single	LP	512	128	0	0	Y	Y	–	–	–	36	68-QFN
CY8C6347LQI-BLD52	150/50	100/25	Dual	FLEX	1024	288	2	12	Y	Y	Y	–	–	36	68-QFN
CY8C6336BZI-BLF03	150/-	–/25	Single	LP	512	128	0	0	–	–	–	–	Y	78	116-BGA
CY8C6316BZI-BLF03	-/50	–/25	Single	ULP	512	128	0	0	–	-	-	-	Y	78	116-BGA
CY8C6316BZI-BLF53	-/50	–/25	Single	ULP	512	128	2	12	Y	Y	-	-	Y	78	116-BGA
CY8C6337BZI-BLF13	150/-	–/25	Single	LP	1024	288	0	0	Y	-	-	-	Y	78	116-BGA
CY8C6336BZI-BLD13	150/-	100/-	Dual	LP	512	128	0	0	Y	-	-	-	Y	78	116-BGA
CY8C6347BZI-BLD43	150/50	100/25	Dual	FLEX	1024	288	0	0	Y	Y	Y	-	Y	78	116-BGA
CY8C6347BZI-BLD33	150/50	100/25	Dual	FLEX	1024	288	2	12	Y	-	-	-	Y	78	116-BGA
CY8C6347BZI-BLD53	150/50	100/25	Dual	FLEX	1024	288	2	12	Y	Y	Y	-	Y	78	116-BGA
CY8C6347BZI-BLD53T															
CY8C6336BZI-BLF04	150/-	–/25	Single	LP	512	128	0	0	–	-	-	Y	Y	84	124-BGA
CY8C6316BZI-BLF04	-/50	–/25	Single	ULP	512	128	0	0	–	-	-	Y	Y	84	124-BGA
CY8C6316BZI-BLF54	-/50	–/25	Single	ULP	512	128	2	12	Y	Y	-	Y	Y	84	124-BGA
CY8C6337BZI-BLF14	150/-	–/25	Single	LP	1024	288	0	0	Y	-	-	Y	Y	84	124-BGA

(table continues...)

Table 60 (continued) Marketing part numbers

Product[1]	CM4 CPU Speed [LP/ULP] (MHz)	CM0+ CPU Speed [LP/ULP] (MHz)	Single CPU/ Dual CPU	Power Mode	Flash (KB)	SRAM (KB)	Opamp	No. of UDBs	CAPSENSE™	CRYPTO	'Secure Boot'	USB	Audio Subsystem	GPIOs	Package
CY8C6336BZI-BLD14	150/-	100/-	Dual	LP	512	128	0	0	Y	-	-	Y	Y	84	124-BGA
CY8C6347BZI-BLD44	150/50	100/25	Dual	FLEX	1024	288	0	0	Y	Y	Y	Y	Y	84	124-BGA
CY8C6347BZI-BLD34	150/50	100/25	Dual	FLEX	1024	288	2	12	Y	-	-	Y	Y	84	124-BGA
CY8C6347BZI-BLD54	150/50	100/25	Dual	FLEX	1024	288	2	12	Y	Y	Y	Y	Y	84	124-BGA
CY8C6347FMI-BLD13T	150/50	100/25	Dual	FLEX	1024	288	0	0	Y	-	-	-	Y	70	104-M-CSP
CY8C6347FMI-BLD43T	150/50	100/25	Dual	FLEX	1024	288	0	0	Y	Y	Y	-	Y	70	104-M-CSP
CY8C6347FMI-BLD33T	150/50	100/25	Dual	FLEX	1024	288	2	12	Y	-	-	-	Y	70	104-M-CSP
CY8C6347FMI-BLD53T	150/50	100/25	Dual	FLEX	1024	288	2	12	Y	Y	Y	-	Y	70	104-M-CSP
CY8C6347FMI-BUD13T	150/50	100/25	Dual	FLEX	1024	288	0	0	Y	-	-	Y	Y	69	104-M-CSP
CY8C6347FMI-BUD43T	150/50	100/25	Dual	FLEX	1024	288	0	0	Y	Y	Y	Y	Y	69	104-M-CSP
CY8C6347FMI-BUD33T	150/50	100/25	Dual	FLEX	1024	288	2	12	Y	-	-	Y	Y	69	104-M-CSP
CY8C6347FMI-BUD53T	150/50	100/25	Dual	FLEX	1024	288	2	12	Y	Y	Y	Y	Y	69	104-M-CSP

1) The tape and reel field in the part number (part numbers ending with the letter 'T') is only used for ordering purposes. This field is -t included in the MPN database used for firmware development.

Base features (available in all the part numbers):

- CPU Subsystem: Arm® Cortex®-M4F (CM4), Arm® Cortex®-CM0+ (CM0+), 2x DMA Controllers
- BLE: Bluetooth(R) BLE radio
- SCBs: 1x Deep-Sleep SCB (I2C/SPI) , 8x SCB (I2C/SPI/UART)[5]
- Analog: 2x Low-Power Comparators, 1x 12-bit DAC, 1x 12-bit SAR ADC
- Digital: 1x Quad-SPI Memory I/F, 32x TCPWMs

5 The number of instances of a peripheral, like SCB (I2C/SPI/UART), or like TCPWM, for example, will be limited by the number of GPIOs supported by the package. Please use the ModusToolbox™ software device configuration tools to find the package specific availability of peripherals like SCB and TCPWM.

- Audio: 1x I2S interface, 2x PDM channels (if audio subsystem present)
- Others: 1x DC-DC Buck converter, Segment LCD Drive

***Note**: In PSOC™ 63 Single CPU the Cortex® M0+ is reserved for system functions, and is -t available for applications.*

7.1 PSOC™ 6 MPN decoder

CY XX 6 A B C DD E - FF G H I JJ K L

Field	Description	Values	Meaning
CY	Cypress	CY	Cypress - An Infineon Technologies company
XX	Firmware	8C	Standard
		B0	“Secure Boot” v1
		S0	“Standard Secure” - AWS
6	Architecture	6	PSOC™ 6
A	Line	0	Value
		1	Programmable
		2	Performance
		3	Connectivity
		4	Secured
B	Speed	2	100 MHz
		3	150 MHz
		4	150/50 MHz
C	Memory size (Flash/SRAM)	0-3	Reserved
		4	256K/128K
		5	512K/256K
		6	512K/128K
		7	1024K/288K
		8	1024K/512K
		9	Reserved
		A	2048K/1024K
DD	Package	AZ, AX	TQFP
		LQ	QFN
		BZ, BT	BGA
		FM	M-CSP
		FN, FD, FT	WLCSP
E	Temperature range	C	Consumer
		I	Industrial

Field	Description	Values	Meaning
		Q	Extended Industrial
FF	Feature code	S2-S6	Cypress internal
		BL	Integrated Bluetooth® LE
G	CPU core	F	Single Core
		D	Dual Core
H	Attributes code	0–9	Feature set
I	GPIO count	1	31–50
		2	51–70
		3	71–90
		4	91–110
JJ	Engineering sample (optional)	ES	Engineering samples or not
K	Die revision (optional)		Base
		A1–A9	Die revision
L	Tape/Reel shipment (optional)	T	Tape and Reel shipment

8 Packaging

This product line is offered in four packages: 68-QFN, 116-BGA, 124-BGA, and 104-M-CSP.

Table 61 Package Dimensions

Spec ID#	Package	Description	Package Drawing Number
PKG_1	124-BGA	124-BGA, 9 × 9 × 1 mm height with 0.65-mm pitch	001-97718
PKG_2	104-M-CSP	104-M-CSP, 3.8 × 5 × 0.65 mm height with 0.35-mm pitch	002-16508
PKG_4	116-BGA	116-BGA, 5.2 × 6.4 × 0.70 mm height with 0.5-mm pitch	002-16574
PKG_5	68-QFN	68-QFN, 8 × 8 × 1 mm height with 0.4-mm pitch	001-96836

Table 62 Package Characteristics

Parameter	Description	Conditions	Min	Typ	Max	Unit
T_A	Operating ambient temperature	–	–40	25.00	85	°C
T_J	Operating junction temperature	–	–40	–	100	°C
T_{JA}	Package θ_{JA} (124-BGA)	–	–	64.3	–	°C/watt
T_{JC}	Package θ_{JC} (124-BGA)	–	–	37	–	°C/watt
T_{JA}	Package θ_{JA} (116-BGA)	–	–	36.5	–	°C/watt
T_{JC}	Package θ_{JC} (116-BGA)	–	–	12	–	°C/watt
T_{JA}	Package θ_{JA} (104-CSP)	–	–	33.7	–	°C/watt
T_{JC}	Package θ_{JC} (104-CSP)	–	–	0.2	–	°C/watt
T_{JA}	Package θ_{JA} (68-QFN)	–	–	21.6	–	°C/watt
T_{JC}	Package θ_{JC} (68-QFN)	–	–	7.2	–	°C/watt

Table 63 Solder reflow peak temperature

Package	Maximum peak temperature	Maximum time at peak temperature
124-BGA, 116-BGA, and 68-QFN	260°C	30 seconds
104-M-CSP	260°C	30 seconds

Table 64 Package Moisture Sensitivity Level (MSL), IPC/JEDEC J-STD-2

Package	MSL
124-BGA, 116-BGA, and 68-QFN	MSL 3
104-M-CSP	MSL 1

8 Packaging

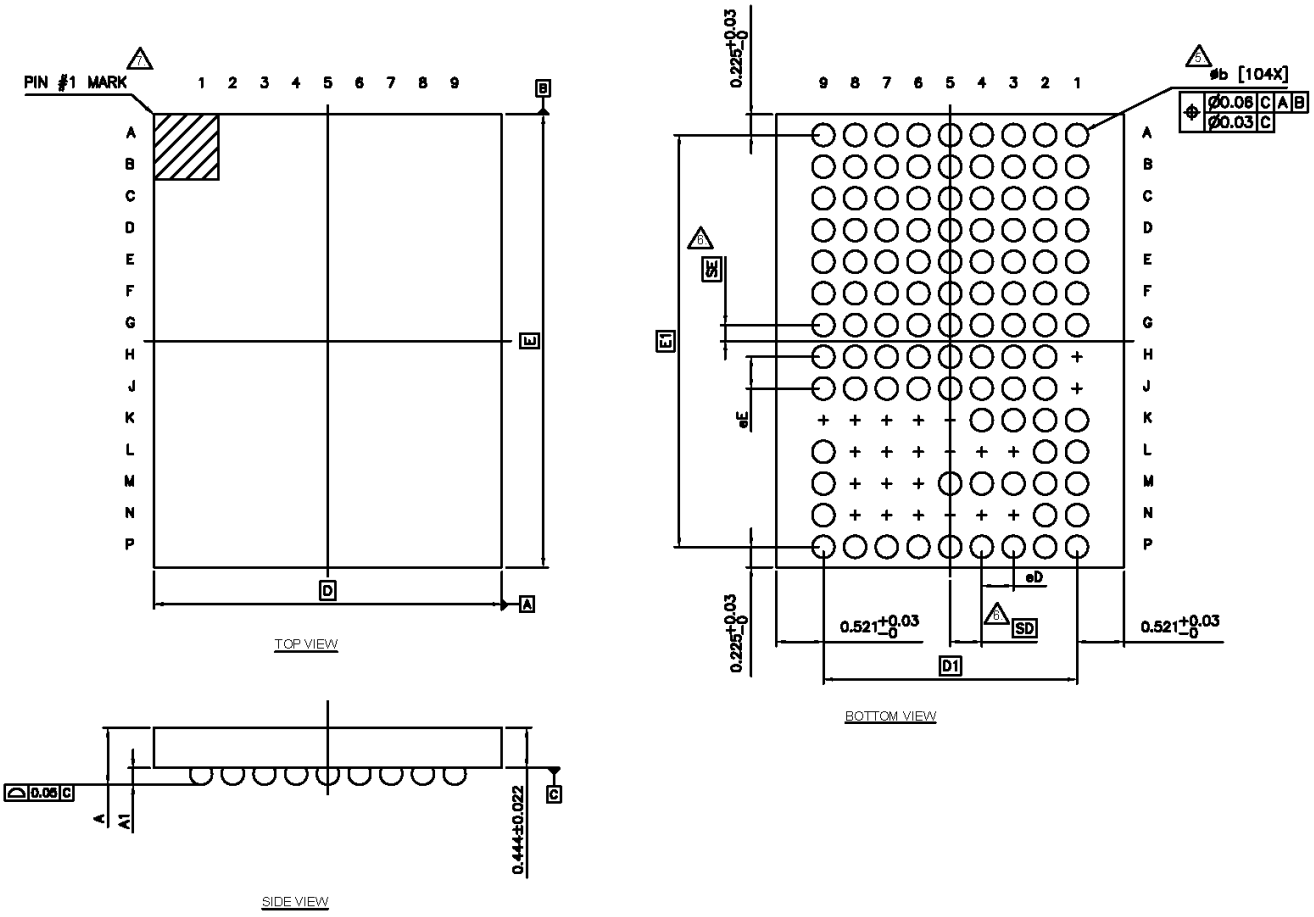

SYMBOL	DIMENSIONS		
	MIN.	NOM.	MAX.
A	-	-	0.650
A1	0.167	0.185	0.203
D	3.791	3.841	3.891
E	4.95	5.00	5.05
D1	2.80 BSC		
E1	4.55 BSC		
MD	9		
ME	14		
N	104		
Ø b	0.215	0.245	0.275
eD	0.335	0.350	0.365
eE	0.335	0.350	0.365
SD	0.35 BSC		
SE	0.175 BSC		

NOTES:

1. ALL DIMENSIONS ARE IN MILLIMETERS.
2. SOLDER BALL POSITION DESIGNATION PER JEP95, SECTION 3, SPP-020.
3. "e" REPRESENTS THE SOLDER BALL GRID PITCH.
4. SYMBOL "MD" IS THE BALL MATRIX SIZE IN THE "D" DIRECTION.
   SYMBOL "ME" IS THE BALL MATRIX SIZE IN THE "E" DIRECTION.
   N IS THE NUMBER OF POPULATED SOLDER BALL POSITIONS FOR MATRIX SIZE MD X ME.
5. DIMENSION "b" IS MEASURED AT THE MAXIMUM BALL DIAMETER IN A PLANE PARALLEL TO DATUM C.
6. "SD" AND "SE" ARE MEASURED WITH RESPECT TO DATUMS A AND B AND DEFINE THE POSITION OF THE CENTER SOLDER BALL IN THE OUTER ROW.
   WHEN THERE IS AN ODD NUMBER OF SOLDER BALLS IN THE OUTER ROW, "SD" OR "SE" = 0.
   WHEN THERE IS AN EVEN NUMBER OF SOLDER BALLS IN THE OUTER ROW, "SD" = eD/2 AND "SE" = eE/2.
7. A1 CORNER TO BE IDENTIFIED BY CHAMFER, LASER OR INK MARK METALIZED MARK, INDENTATION OR OTHER MEANS.
8. "+" INDICATES THE THEORETICAL CENTER OF DEPOPULATED SOLDER BALLS.
9. JEDEC SPECIFICATION NO. REF. : N/A.

002-16508 *E

Figure 21 **104-M-CSP 3.8 × 5.0 × 0.65 mm**

8 Packaging

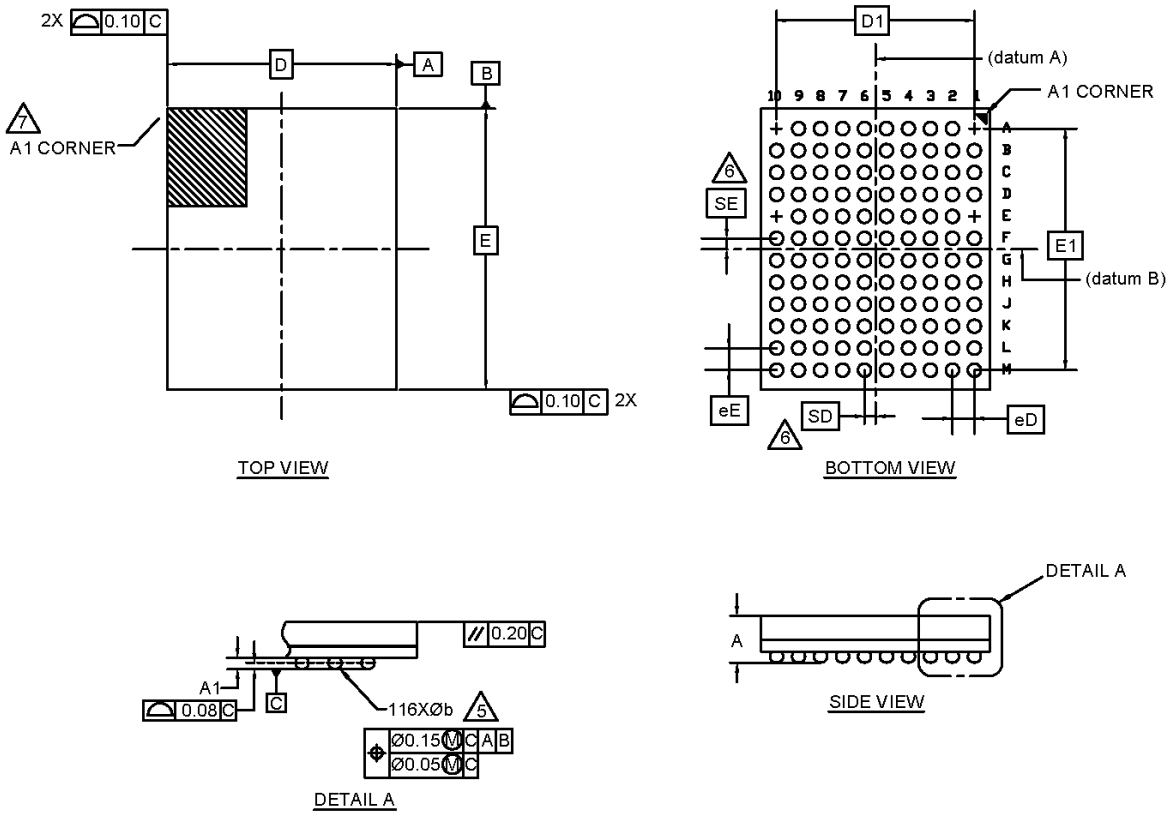

SYMBOL	DIMENSIONS		
	MIN.	NOM.	MAX.
A	-	-	0.70
A1	0.16	0.21	0.26
D	5.20 BSC		
E	6.40 BSC		
D1	4.50 BSC		
E1	5.50 BSC		
MD	10		
ME	12		
N	116		
Ø b	0.25	0.30	0.35
eD	0.50 BSC		
eE	0.50 BSC		
SD	0.25 BSC		
SE	0.25 BSC		

NOTES:

1. ALL DIMENSIONS ARE IN MILLIMETERS.
2. SOLDER BALL POSITION DESIGNATION PER JEP95, SECTION 3, SPP-020.
3. "e" REPRESENTS THE SOLDER BALL GRID PITCH.
4. SYMBOL "MD" IS THE BALL MATRIX SIZE IN THE "D" DIRECTION.
   SYMBOL "ME" IS THE BALL MATRIX SIZE IN THE "E" DIRECTION.
   N IS THE NUMBER OF POPULATED SOLDER BALL POSITIONS FOR MATRIX SIZE MD X ME.
5. DIMENSION "b" IS MEASURED AT THE MAXIMUM BALL DIAMETER IN A PLANE PARALLEL TO DATUM C.
6. "SD" AND "SE" ARE MEASURED WITH RESPECT TO DATUMS A AND B AND DEFINE THE POSITION OF THE CENTER SOLDER BALL IN THE OUTER ROW.
   WHEN THERE IS AN ODD NUMBER OF SOLDER BALLS IN THE OUTER ROW "SD" OR "SE" = 0.
   WHEN THERE IS AN EVEN NUMBER OF SOLDER BALLS IN THE OUTER ROW, "SD" = eD/2 AND "SE" = eE/2.
7. A1 CORNER TO BE IDENTIFIED BY CHAMFER, LASER OR INK MARK METALIZED MARK, INDENTATION OR OTHER MEANS.
8. "+" INDICATES THE THEORETICAL CENTER OF DEPOPULATED SOLDER BALLS.
9. JEDEC SPECIFICATION NO. REF: N/A

002-16574 *B

Figure 22 **116-BGA 5.2 × 6.4 × 0.70 mm**

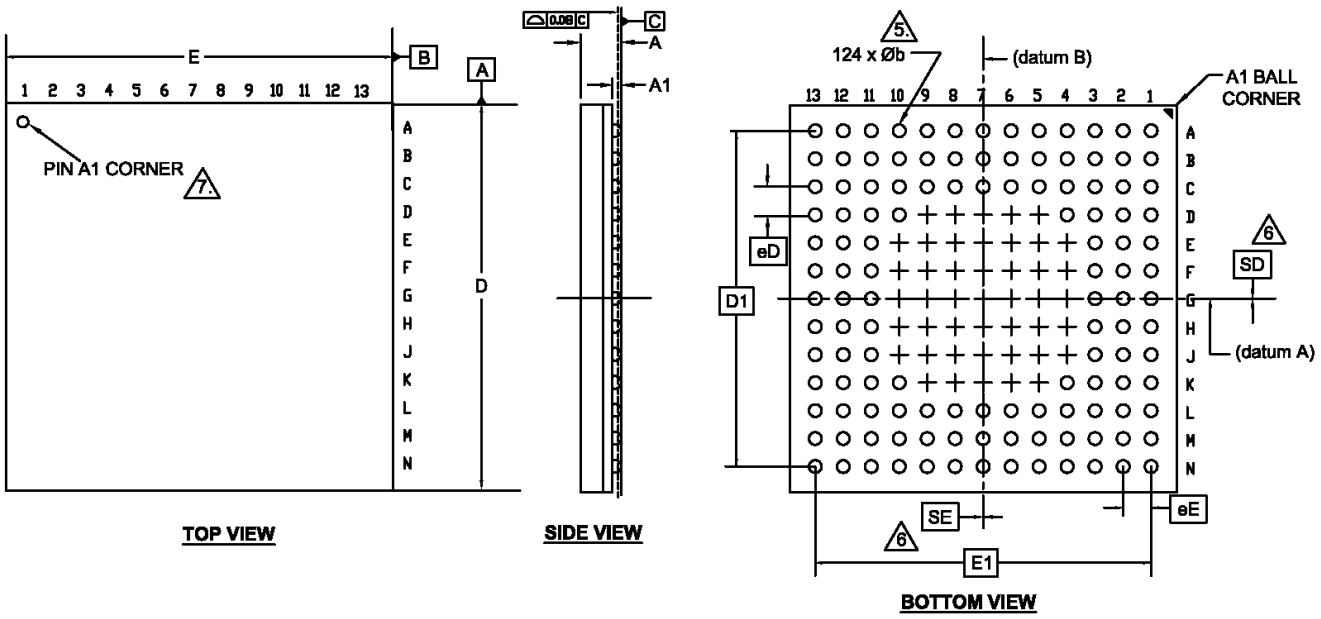

SYMBOL	DIMENSIONS		
	MIN.	NOM.	MAX.
A	-	-	1.00
A1	0.16	0.21	0.26
D	8.90	9.00	9.10
E	8.90	9.00	9.10
D1	7.80 BSC		
E1	7.80 BSC		
MD	13		
ME	13		
N	124		
Ø b	0.25	0.30	0.35
eD	0.65 BSC		
eE	0.65 BSC		
SD	0		
SE	0		

NOTES:

1. ALL DIMENSIONS ARE IN MILLIMETERS.
2. SOLDER BALL POSITION DESIGNATION PER JEP95, SECTION 3, SPP-020.
3. "e" REPRESENTS THE SOLDER BALL GRID PITCH.
4. SYMBOL "MD" IS THE BALL MATRIX SIZE IN THE "D" DIRECTION.
   SYMBOL "ME" IS THE BALL MATRIX SIZE IN THE "E" DIRECTION.
   N IS THE NUMBER OF POPULATED SOLDER BALL POSITIONS FOR MATRIX SIZE MD X ME.

5. DIMENSION "b" IS MEASURED AT THE MAXIMUM BALL DIAMETER IN A PLANE PARALLEL TO DATUM C.

6. "SD" AND "SE" ARE MEASURED WITH RESPECT TO DATUMS A AND B AND DEFINE THE POSITION OF THE CENTER SOLDER BALL IN THE OUTER ROW.
   WHEN THERE IS AN ODD NUMBER OF SOLDER BALLS IN THE OUTER ROW "SD" OR "SE" = 0.
   WHEN THERE IS AN EVEN NUMBER OF SOLDER BALLS IN THE OUTER ROW, "SD" = eD/2 AND "SE" = eE/2.

7. A1 CORNER TO BE IDENTIFIED BY CHAMFER, LASER OR INK MARK METALIZED MARK, INDENTATION OR OTHER MEANS.
8. "+" INDICATES THE THEORETICAL CENTER OF DEPOPULATED SOLDER BALLS.
9. JEDEC SPECIFICATION NO. REF. : MO-280.

001-97718 *B

Figure 23 **124-BGA 9.0 × 9.0 ×1.0 mm**

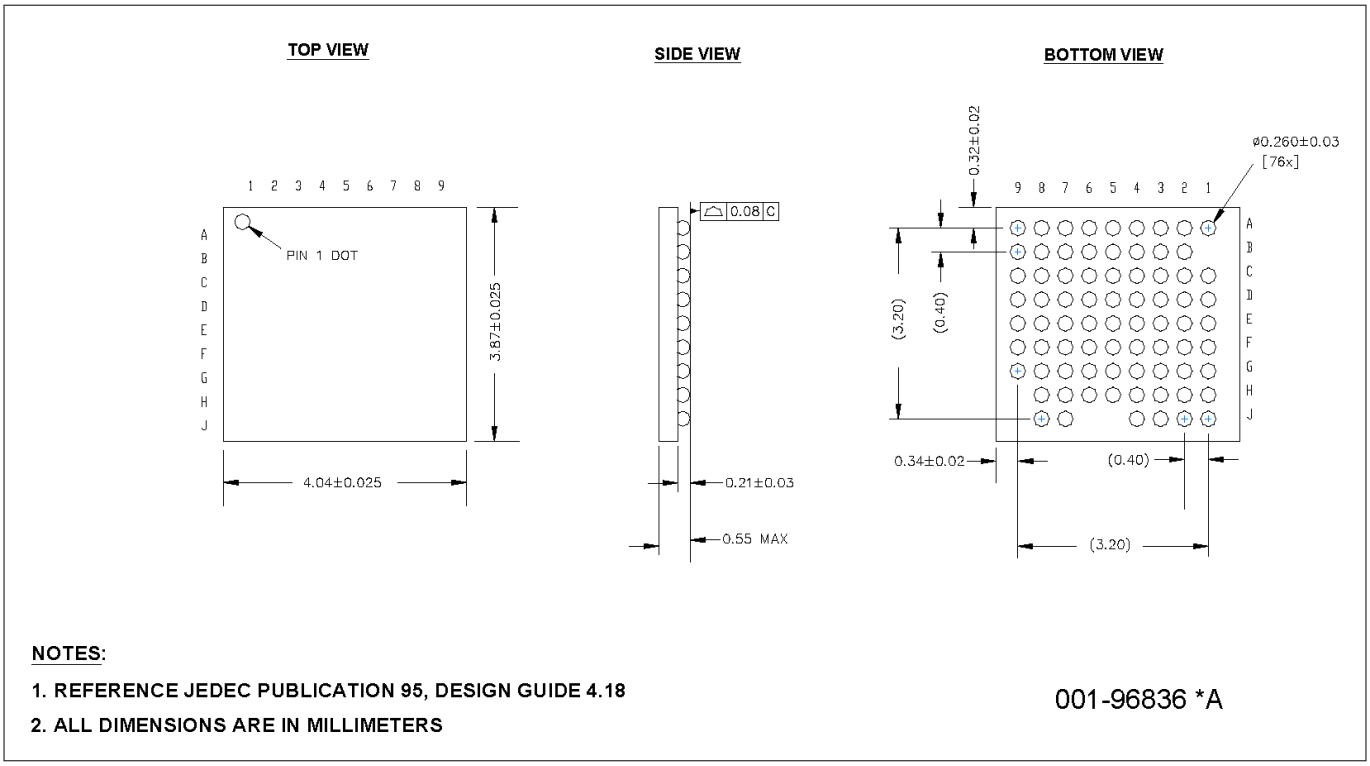

Figure 24 **68 QFN 8 × 8 × 1 mm**

9 Acronyms

Acronym	Description
3DES	triple DES (data encryption standard)
ADC	analog-to-digital converter
AES	advanced encryption standard
AHB	AMBA (advanced microcontroller bus architecture) high-performance bus, an Arm® data transfer bus
AMUX	analog multiplexer
AMUXBUS	analog multiplexer bus
API	application programming interface
Arm®	advanced RISC machine, a CPU architecture
BGA	ball grid array
BOD	brown-out detect
CAD	computer aided design
CCO	current controlled oscillator
CM0+	Cortex®-M0+, an Arm® CPU
CM4	Cortex®-M4, an Arm® CPU
CMAC	cipher-based message authentication code
CMOS	complementary metal-oxide-semiconductor, a process technology for IC fabrication
CMRR	common-mode rejection ratio
CPU	central processing unit
CRC	cyclic redundancy check, an error-checking protocol
CSD	Capacitive Sigma-Delta
CSX	Mutual capacitance sensing method. See also CSD
DAC	digital-to-analog converter, see also IDAC, VDAC
DAP	debug ccess port
DES	data encryption standard
DMA	direct memory access, see also TD
DNL	differential nonlinearity, see also INL
DSI	digital system interconnect
DU	data unit
ECC	elliptic curve cryptography
ECO	external crystal oscillator
EEPROM	electrically erasable programmable read-only memory
EMI	electromagnetic interference

Acronym	Description
ESD	electrostatic discharge
ETM	embedded trace macrocell
FIFO	first-in, first-out
FLL	frequency locked loop
FPU	floating-point unit
FS	full-speed
GND	Ground
GPIO	general-purpose input/output, applies to a PSOC™ pin
HMAC	Hash-based message authentication code
HSIOM	high-speed I/O matrix
I/O	input/output, see also GPIO, DIO, SIO, USBIO
I^2C, or IIC	Inter-Integrated Circuit, a communications protocol
I^2S	inter-IC sound
IC	integrated circuit
IDAC	current DAC, see also DAC, VDAC
IDE	integrated development environment
ILO	internal low-speed oscillator, see also IMO
IMO	internal main oscillator, see also ILO
INL	integral nonlinearity, see also DNL
IoT	internet of things
IPC	inter-processor communication
IRQ	interrupt request
ISR	interrupt service routine
JTAG	Joint Test Action Group
LCD	liquid crystal display
LIN	Local Interconnect Network, a communications protocol
LP	low power
LS	low-speed
LUT	lookup table
LVD	low-voltage detect, see also LVI
LVTTL	low-voltage transistor-transistor logic
MAC	multiply-accumulate
M-CSP	molded chip scale package
MCU	microcontroller unit
MCWDT	multi-counter watchdog timer

Acronym	Description
MISO	master-in slave-out
MMIO	memory-mapped input output
MOSI	master-out slave-in
MPU	memory protection unit
MSL	moisture sensitivity level
Msps	million samples per second
MTB	micro trace buffer
MUL	multiplier
NC	no connect
NMI	nonmaskable interrupt
NVIC	nested vectored interrupt controller
OTP	one-time programmable
OVT	overvoltage tolerant
PASS	programmable analog subsystem
PCB	printed circuit board
PCM	pulse code modulation
PDM	pulse density modulation
PHY	physical layer
PICU	port interrupt control unit
PLL	phase-locked loop
PMIC	power management integrated circuit
POR	power-on reset
PPU	peripheral protection unit
PRNG	pseudo random number generator
PSOC™	Programmable System-on-Chip
PSRR	power supply rejection ratio
PWM	pulse-width modulator
QD	quadrature decoder
QSPI	quad serial peripheral interface
RAM	random-access memory
RISC	reduced-instruction-set computing
RMS	root-mean-square
ROM	read-only memory
RSA	Rivest–Shamir–Adleman, a public-key cryptography algorithm
RTC	real-time clock

9 Acronyms

Acronym	Description
RX	receive
S/H	sample and hold
SAR	successive approximation register
SARMUX	SAR ADC multiplexer bus
SCB	serial communication block
SFlash	supervisory flash
SHA	secure hash algorithm
SINAD	signal to noise and distortion ratio
SNR	signal-to-noise ration
SOF	start of frame
SPI	Serial Peripheral Interface, a communications protocol
SRAM	static random access memory
SROM	supervisory read-only memory
SRSS	system resources subsystem
SWD	serial wire debug, a test protocol
SWJ	serial wire JTAG
SWO	single wire output
SWV	serial-wire viewer
TCPWM	timer, counter, pulse-width modulator
TDM	time division multiplexed
TQFP	thin quad flat package
TRM	technical reference manual
TRNG	true random number generator
TX	transmit
UART	Universal Asynchronous Transmitter Receiver, a communications protocol
UDB	universal digital block
ULP	ultra-low power
USB	Universal Serial Bus
WCO	watch crystal oscillator
WDT	watchdog timer
WIC	wakeup interrupt controller
WLCSP	wafer level chip scale package
XIP	execute-in-place
XRES	external reset input pin

10 Document conventions

10.1 Unit of measure

Table 65 Unit of measure

Symbol	Unit of measure
°C	degrees Celsius
dB	decibel
fF	femto farad
Hz	hertz
KB	1024 bytes
kbps	kilobits per second
khr	kilohour
kHz	kilohertz
kΩ	kilo Ω
ksps	kilosamples per second
LSB	least significant bit
Mbps	megabits per second
MHz	megahertz
MΩ	mega-Ω
Msps	megasamples per second
µA	microampere
µF	microfarad
µH	microhenry
µs	microsecond
µV	microvolt
µW	microwatt
mA	milliampere
ms	millisecond
mV	millivolt
nA	nanoampere
ns	nanosecond
nV	nanovolt
Ω	Ω
pF	picofarad
ppm	parts per million

(table continues...)

Table 65 (continued) Unit of measure

Symbol	Unit of measure
ps	picosecond
s	second
sps	samples per second
sqrtHz	square root of hertz
V	volt

11 Errata

This section describes the errata for the CY8C63x6, CY8C63x7 devices in the PSOC™ 63 MCU line. Details include errata trigger conditions, scope of impact, available workarounds, and silicon revision applicability.

For more details, contact Infineon support.

Table 66 Part numbers affected

Part number	Device characteristics
CY8C63x6, CY8C63x7 devices	All

Qualification status

Product status: In Production – Qual. Report QTP 174005.

Errata summary

This table defines the errata applicability to CY8C63x6, CY8C63x7 devices in the PSOC™ 63 MCU line.

***Note**: Errata items, in the table below, are hyperlinked. Click on any item entry to jump to its description.*

Items	Part number	Silicon revision	Fix status
Table 67	All	B3 (Major/Minor Die Revision ID: 2/4) with Flash boot revision 1.20.1.45	Flash boot version 1.20.1.53 resolves the issue

Table 67 Boot lock-up

Problem definition	In extremely rare circumstances, on the order of once every 10,000 -100,000+ reset or power cyceles, during boot the device may enter an infinte fault handler loop (never reaches application code).
Parameters affected	Device may not transition from boot to application code
Trigger condition(s)	Only occurs if TOC2 (table of contents #2) is instantiated in Sflash by user. TOC2 is used for secure lifecycle stage or to alter boot-time defaults in normal lifecycle stage.
Scope of impact	Device may not transition from boot to application code
Workaround	Reset or power cycle the device
Fix status	Flashboot revision 1.20.1.53 resolves the issue. Note that flashboot cannot be field-udapted. Flashboot 1.20.1.53 is deployed beginning with date code 2619

Revision history

Document revision	Date	Description of changes
*F	2018-05-03	Release of production datasheet.
*G	2018-07-17	Corrected document number in the revision history table.
*H	2019-04-01	Updated Functional Description. Added “Pinouts for 104-MCSP with USB” table in Pinouts. Added package diagram (spec 001-97718 *B). Added a note in Table 4. Updated Table 13, Table 31, and Table 53 in Electrical specifications. Updated Features, Blocks and Functionality, ILO Clock Source, One-Time-Programmable (OTP) eFuse, Packaging, and Ordering Information. Updated Figure 22 (spec 002-16508 *D to *E) in Packaging. Corrected Unit usage throughout the document. Added Errata. Updated Copyright information in Sales page.
*I	2019-09-20	Updated the title. Added UDB in Acronyms.
*J	2019-12-20	Updated Features. Updated Blocks and functionality and Functional Description Updated Pinouts and Power supply considerations.
*K	2020-03-31	Updated Features. Updated Functional Description. Updated Pinouts. Updated PSOC™ 6 MPN Decoder.
*L	2020-06-22	Updated Development ecosystem, GPIO, and LCD sections. Added External Crystal Oscillators. Updated Errata.

Document revision	Date	Description of changes
*M	2020-11-10	Updated Flexible clocking options, Figure 3 shows the major subsystems and a simplified view of their interconnections. The color coding shows the lowest power mode where a block is still functional. For example, the SRAM is functional down to Deep Sleep modeBlock diagram, CPUs, Clock system, and SID431. Updated Universal digital blocks (UDBs), UDB Port Adapter Specifications Conditions. Added InterProcessor Communication (IPC). Updated Analog subsystem diagram. Updated the XRES bullet in Reset, updated SID15 Description and Conditions, and Power-on-reset specifications table. Updated ModusToolbox™ Software. Updated Reset. Updated Clocking diagram. Updated Protection units and Boot Code. Integrated ECO erratum into External Crystal Oscillators. Added ECO usage guidelines table. Updated Power supply considerations. Updated Opamp specifications. Added spec SID468 - SID474, and SID468A - SID474A. Updated Audio Spec SID408. Updated SID7A conditions, SID7D description, and SID8 conditions. Added footnote to TMCLK_SOC specs.
*N	2021-02-26	Added Table 12 and Figure . Updated conditions for SID316 and updated description of SID319. Changed BLE references to Bluetooth® LE. Updated Security terminology to Infineon standards. Removed the Errata section; incorporated errata into the GPIO, ADC, and CAPSENSE™ sections.
*O	2021-06-30	Added opamp graphs (Figure 20 and Figure 21).
*P	2021-12-14	Added note regarding unused USB pins in USB Full-Speed device interface, Power supply considerations, and Pinouts. Updated SIDC1 description. Updated Figure and added related footnote. Updated details/conditions for SID7A. Updated SID325U, SID328, and SID329 description. Added I2S column to Table 59.

Revision history

Document revision	Date	Description of changes
*Q	2022-10-31	Added device identification and revision information in Features. Added spec SID415 and SID304P. Added footnote "Guaranteed by design, not production tested" for specs SID402 - SID412. Updated Clock system and PLL specifications. Updated Protection units.
*R	2023-05-08	Added a note to clarify that PSOC™ Creator is not recommended for new designs.
*S	2026-06-19	Template update. No content update. Updated Features Updated USB Full-Speed device/host Interface Added Errata Changed PSoC™ to PSOC™
*T	2026-09-21	Updated PSOC™ 6 MCU resources Updated Functional description Removed unnecessary pins from Table 10 Updated Ordering information table

Trademarks

The Bluetooth® word mark and logos are registered trademarks owned by Bluetooth SIG, Inc., and any use of such marks by Infineon is under license.

PSOC™, formerly known as PSoC™, is a trademark of Infineon Technologies. Any references to PSoC™ in this document or others shall be deemed to refer to PSOC™.

Trademarks

All referenced product or service names and trademarks are the property of their respective owners.

Edition 2026-09-21

Published by

Infineon Technologies AG

81726 Munich, Germany

© 2026 Infineon Technologies AG

All Rights Reserved.

Do you have a question about any aspect of this document?

Email: erratum@infineon.com

Document reference
IFX-elm1727072281032

Important notice

Products which may also include samples and may be comprised of hardware or software or both ("Product(s)") are sold or provided and delivered by Infineon Technologies AG and its affiliates ("Infineon") subject to the terms and conditions of the frame supply contract or other written agreement(s) executed by a customer and Infineon or, in the absence of the foregoing, the applicable Sales Conditions of Infineon. General terms and conditions of a customer or deviations from applicable Sales Conditions of Infineon shall only be binding for Infineon if and to the extent Infineon has given its express written consent.

For the avoidance of doubt, Infineon disclaims all warranties of non-infringement of third-party rights and implied warranties such as warranties of fitness for a specific use/purpose or merchantability. Infineon shall not be responsible for any information with respect to samples, the application or customer's specific use of any Product or for any examples or typical values given in this document.

If this document is marked as 'Preliminary', 'Target', 'Draft' or 'Proposal', Infineon reserves the right to change all information given in this document at any time without notice. Subject to the development and release of a Product for series supply by Infineon, the technical specifications of the Product are set forth in the relevant datasheet provided by Infineon without such marking.

The data contained in this document is exclusively intended for technically qualified and skilled customer representatives. It is the responsibility of the customer to evaluate the suitability of the Product for the intended application and the customer's specific use and to verify all relevant technical data contained in this document in the intended application and the customer's specific use. The customer is responsible for properly designing, programming, and testing the functionality and safety of the intended application, as well as complying with any legal requirements related to its use.

Unless otherwise explicitly approved by Infineon, Products may not be used in any application where a failure of the Products or any consequences of the use thereof can reasonably be expected to result in personal injury.

However, the foregoing shall not prevent the customer from using any Product in such fields of use that Infineon has explicitly designed and sold it for, provided that the overall responsibility for the application lies with the customer. Infineon expressly reserves the right to use its content for commercial text and data mining (TDM) according to applicable laws, e.g. Section 44b of the German Copyright Act (UrhG). If the Product includes security features:

Because no computing device can be absolutely secure, and despite security measures implemented in the Product, Infineon does not guarantee that the Product will be free from intrusion, data theft or loss, or other breaches ("Security Breaches"), and Infineon shall have no liability arising out of any Security Breaches.

If this document includes or references software:

The software is owned by Infineon under the intellectual property laws and treaties of the United States, Germany, and other countries worldwide. All rights reserved. Therefore, you may use the software only as provided in the software license agreement accompanying the software.

If no software license agreement applies, Infineon hereby grants you a personal, non-exclusive, non-transferable license (without the right to sublicense) under its intellectual property rights in the software (a) for software provided in source code form, to modify and reproduce the software solely for use with Infineon hardware products, only internally within your organization, and (b) to distribute the software in binary code form externally to end users, solely for use on Infineon hardware products. Any other use, reproduction, modification, translation, or compilation of the software is prohibited.

For further information on the Product, technology, delivery terms and conditions, and prices, please contact your nearest Infineon office or visit www.infineon.com.